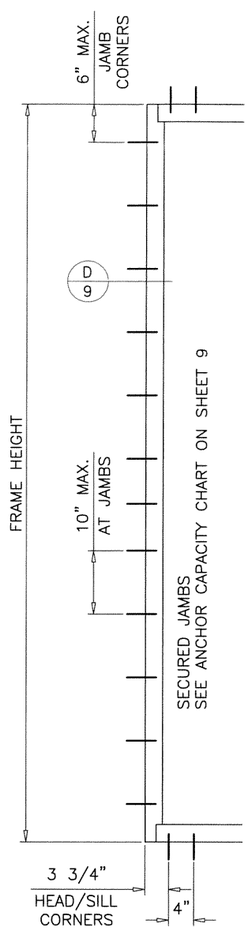

OPTION WITH
JAMB ANCHORS

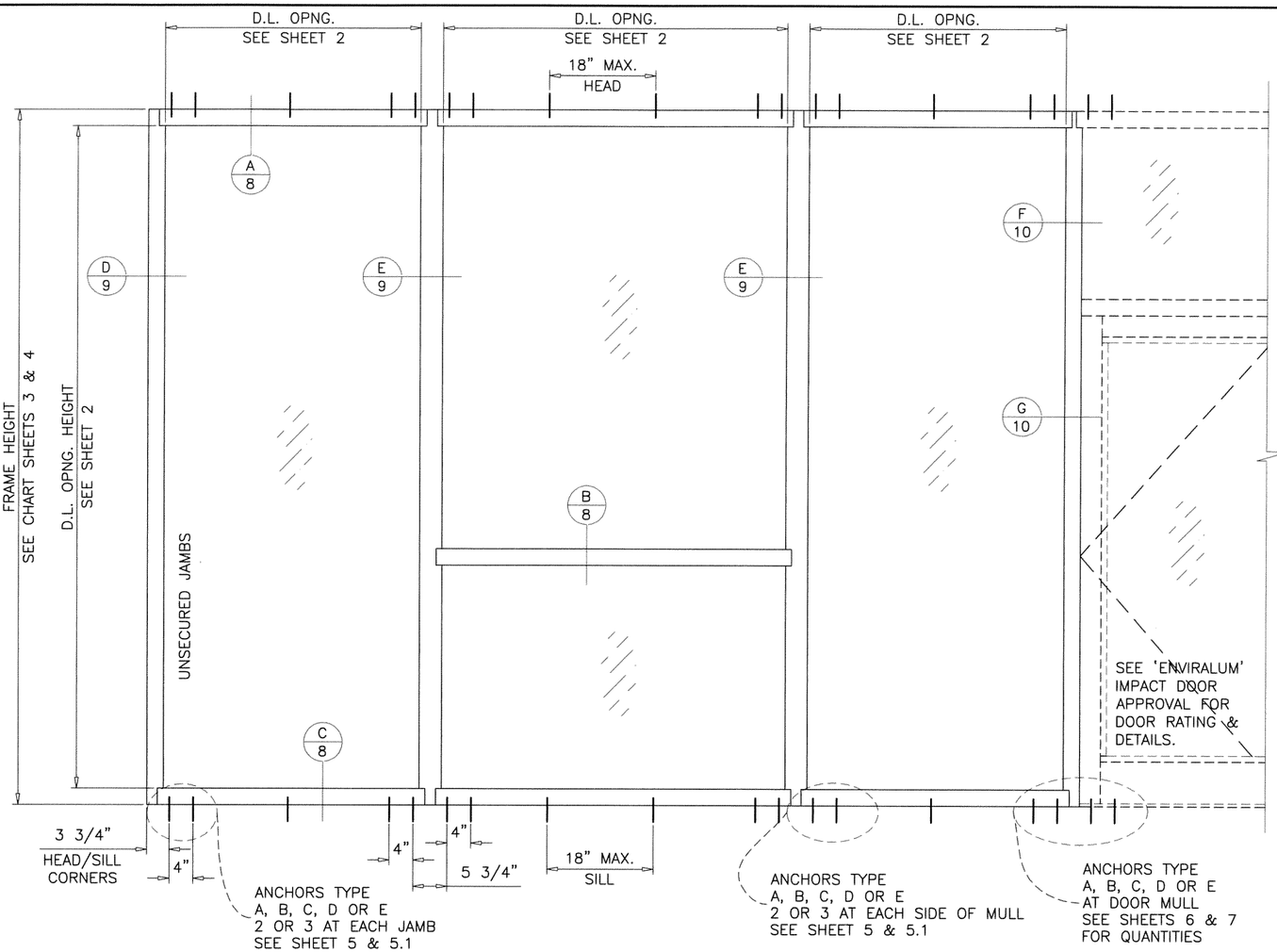

TYPICAL ELEVATIONS

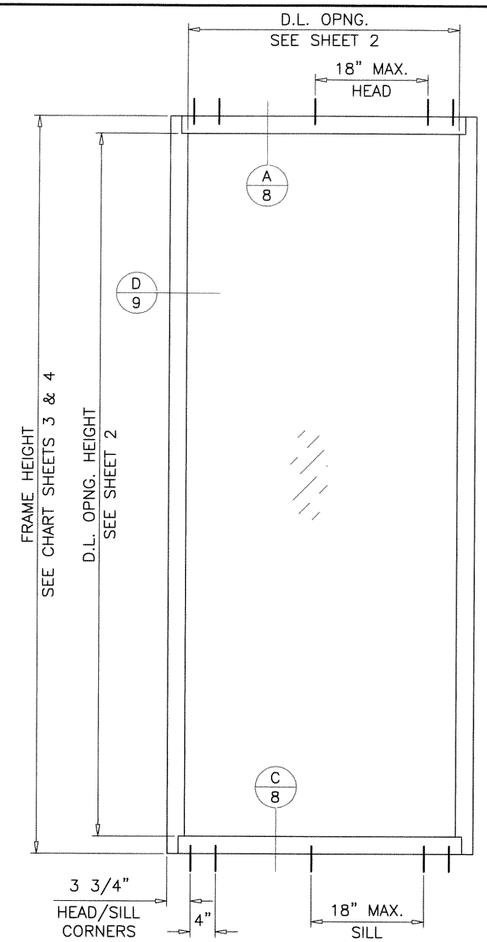

SINGLE 'O' PANEL:
FRAME WIDTH = D.L.O. WIDTH + 5.500"
FRAME HEIGHT = D.L.O. HEIGHT + 5.500"

SERIES ENV-450 ALUMINUM WINDOW WALL SYSTEM

THIS SYSTEM MAY BE USED IN CONJUNCTION WITH F.B.C. APPR'D LARGE MISSILE IMPACT RESISTANT DOORS.

LOWER DESIGN PRESSURE FROM STOREFRONT OR DOOR APPROVAL WILL APPLY TO ENTIRE SYSTEM.

CODE REQUIREMENTS FOR SAFEGUARDS MUST BE OBSERVED.

THIS PRODUCT HAS BEEN DESIGNED AND TESTED TO COMPLY WITH THE REQUIREMENTS OF THE FLORIDA BUILDING CODE INCLUDING HIGH VELOCITY HURRICANE ZONE (HVHZ).

WOOD BUCKS BY OTHERS, MUST BE ANCHORED PROPERLY TO TRANSFER LOADS TO THE STRUCTURE.

ANCHORS SHALL BE AS LISTED, SPACED AS SHOWN ON DETAILS, ANCHORS EMBEDMENT TO BASE MATERIAL SHALL BE BEYOND WALL DRESSING OR STUCCO.

ANCHORING OR LOADING CONDITIONS NOT SHOWN IN THESE DETAILS ARE NOT PART OF THIS APPROVAL.

A LOAD DURATION INCREASE IS USED IN DESIGN OF ANCHORS INTO WOOD ONLY.

ALL SHIMS TO BE HIGH IMPACT, NON-METALLIC AND NON-COMPRESSIBLE.

MATERIALS INCLUDING BUT NOT LIMITED TO STEEL/METAL SCREWS, THAT COME INTO CONTACT WITH OTHER DISSIMILAR MATERIALS SHALL MEET THE REQUIREMENTS OF THE FLORIDA BUILDING CODE.

MANUFACTURER'S LABEL SHALL BE LOCATED ON A READILY VISIBLE LOCATION IN ACCORDANCE WITH SECTION 1710.8.3 OF FLORIDA BUILDING CODE. LABELING TO COMPLY WITH SECTION 1710.8.2.

INSTRUCTIONS:

USE CHARTS AS FOLLOWS.

STEP 1 DETERMINE DESIGN WIND LOAD REQUIREMENT BASED ON WIND VELOCITY, BLDG. HEIGHT, WIND ZONE USING APPLICABLE ASCE 7 STANDARD.

STEP 2 SEE CHARTS ON SHEET 2 FOR DESIGN LOAD CAPACITY OF DESIRED GLASS SIZE.

STEP 3 CHECK MULLION CAPACITY FOR A GIVEN SPACING AND HEIGHT USING CHARTS ON SHEET 3 & 4 FOR STOREFRONT MULLION AND SHEET 6 & 7 FOR DOOR MULLION. THE CAPACITY SHOULD EXCEED THE DESIGN LOAD.

STEP 4 USING CHART ON SHEETS 5 & 5.1 SELECT ANCHOR OPTION WITH DESIGN RATING MORE THAN DESIGN LOAD SPECIFIED IN STEP 1 ABOVE.

STEP 5 THE LOWEST VALUE RESULTING FROM STEPS 2, 3 AND 4 SHALL APPLY TO ENTIRE SYSTEM.

PRODUCT COMPLIES WITH REQUIREMENTS OF ANSI Z97.1.

THIS SYSTEM IS RATED FOR LARGE & SMALL MISSILE IMPACT.
SHUTTERS ARE NOT REQUIRED.
WINDOW WALL FRAMES MAY BE WITH OR WITHOUT THERMAL BREAK.

A- THIS PRODUCT EVALUATION DOCUMENT (P.E.D.) PREPARED BY THIS ENGINEER IS GENERIC AND DOES NOT PROVIDE INFORMATION FOR A SITE SPECIFIC PROJECT; i.e. WHERE THE SITE CONDITIONS DEVIATE FROM THE P.E.D.

B- CONTRACTOR TO BE RESPONSIBLE FOR THE SELECTION, PURCHASE AND INSTALLATION OF THIS PRODUCT BASED ON THIS PRODUCT EVALUATION PROVIDED HE/SHE DOES NOT DEVIATE FROM THE CONDITIONS DETAILED ON THIS DOCUMENT.

C- THIS PRODUCT EVALUATION DOCUMENT WILL BE CONSIDERED INVALID IF ALTERED BY ANY MEANS.

D- SITE SPECIFIC PROJECTS SHALL BE PREPARED BY A FLORIDA REGISTERED ENGINEER OR ARCHITECT WHICH WILL BECOME THE ENGINEER OF RECORD (E.O.R.) FOR THE PROJECT AND WHO WILL BE RESPONSIBLE FOR THE PROPER USE OF THE P.E.D. ENGINEER OF RECORD, ACTING AS A DELEGATED ENGINEER TO THE P.E.D. ENGINEER SHALL SUBMIT TO THIS LATTER THE SITE SPECIFIC DRAWINGS FOR REVIEW.

E- THIS P.E.D. SHALL BEAR THE DATE AND ORIGINAL SEAL AND SIGNATURE OF THE PROFESSIONAL ENGINEER OF RECORD THAT PREPARED IT.

FL #19002

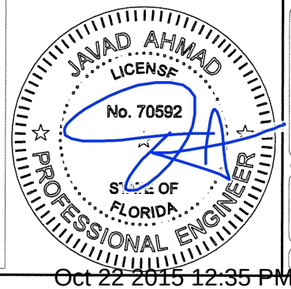

Oct 22 2015 12:35 PM

AL-FAROOQ CORPORATION
ENGINEERS & PRODUCT DEVELOPMENT
1235 S.W. 87 AVE
MIAMI, FLORIDA 33174
TEL. (305) 264-8100 FAX. (305) 262-6978
COMP-ANL\W15-74ENV

SERIES ENV-450 ALUM WINDOW WALL SYS. (L.M.I.)

ENVIRALUM INDUSTRIES INC.
5100 N.W. 72 AVENUE BLDG. C
MIAMI, FL. 33166
TEL. (305) 752-4411 FAX. (305) 406-3877

revisions:			
no	date	by	description

date: 09-28-15
scale: 1/2"=1'-0"
dr. by: HAMID
chk. by:

drawing no. W15-74

GLASS LOAD CAPACITY – PSF					
NOMINAL DIMS.		GLASS TYPES 'A' & 'A1'		GLASS TYPES 'B' & 'B1'	
D.L.O. WIDTH	D.L.O. HEIGHT	EXT.(+)	INT.(–)	EXT.(+)	INT.(–)
30"	78"	90.0	90.0	100.0	131.0
36"		90.0	90.0	100.0	131.0
42"		90.0	90.0	100.0	131.0
48"		90.0	90.0	100.0	131.0
54"		90.0	90.0	100.0	131.0
60"		90.0	90.0	100.0	131.0
66–1/2"		65.0	65.0	100.0	131.0
30"	84"	90.0	90.0	100.0	131.0
36"		90.0	90.0	100.0	131.0
42"		90.0	90.0	100.0	131.0
48"		90.0	90.0	100.0	131.0
54"		90.0	90.0	100.0	131.0
60"		90.0	90.0	100.0	131.0
66–1/2"		65.0	65.0	100.0	126.7
30"	90"	90.0	90.0	100.0	131.0
36"		90.0	90.0	100.0	131.0
42"		90.0	90.0	100.0	131.0
48"		90.0	90.0	100.0	131.0
54"		90.0	90.0	100.0	131.0
60"		65.0	65.0	100.0	126.0
66–1/2"		65.0	65.0	100.0	116.8
30"	96"	90.0	90.0	100.0	131.0
36"		90.0	90.0	100.0	131.0
42"		90.0	90.0	100.0	131.0
48"		90.0	90.0	100.0	131.0
54"		65.0	65.0	100.0	126.8
60"		65.0	65.0	100.0	116.4
30"	102"	90.0	90.0	100.0	131.0
36"		90.0	90.0	100.0	131.0
42"		90.0	90.0	100.0	131.0
48"		90.0	90.0	100.0	129.4
54"		65.0	65.0	100.0	118.5
60"		–	–	100.0	109.2
30"	108"	90.0	90.0	100.0	131.0
36"		90.0	90.0	100.0	131.0
42"		90.0	90.0	100.0	131.0
48"		65.0	65.0	100.0	125.6
54"		65.0	65.0	100.0	111.8
57"		–	–	100.0	106.4
30"	114"	90.0	90.0	100.0	131.0
36"		90.0	90.0	100.0	131.0
42"		90.0	90.0	100.0	131.0
48"		65.0	65.0	100.0	119.5
54"		–	–	100.0	105.6
30"	120"	90.0	90.0	100.0	131.0
36"		90.0	90.0	100.0	131.0
42"		90.0	90.0	100.0	131.0
48"		65.0	65.0	100.0	114.1
51"		–	–	100.0	106.6

GLASS LOAD CAPACITY – PSF					
NOMINAL DIMS.		GLASS TYPES 'A' & 'A1'		GLASS TYPES 'B' & 'B1'	
D.L.O. WIDTH	D.L.O. HEIGHT	EXT.(+)	INT.(–)	EXT.(+)	INT.(–)
30"	126"	90.0	90.0	100.0	131.0
36"		90.0	90.0	100.0	131.0
42"		65.0	65.0	100.0	129.7
48"		65.0	65.0	100.0	109.7
49"		–	–	100.0	107.1
30"	132"	90.0	90.0	100.0	131.0
36"		90.0	90.0	100.0	131.0
42"		65.0	65.0	100.0	128.5
47"		–	–	100.0	108.9
30"	138"	90.0	90.0	100.0	131.0
36"		90.0	90.0	100.0	131.0
42"		65.0	65.0	100.0	127.2
45"		–	–	100.0	112.5
30"	144"	90.0	90.0	100.0	131.0
36"		65.0	65.0	100.0	131.0
42"		65.0	65.0	100.0	126.1
43"		–	–	100.0	120.8

NOTE:
INTERPOLATION BETWEEN WIDTHS OR HEIGHTS ALLOWED.

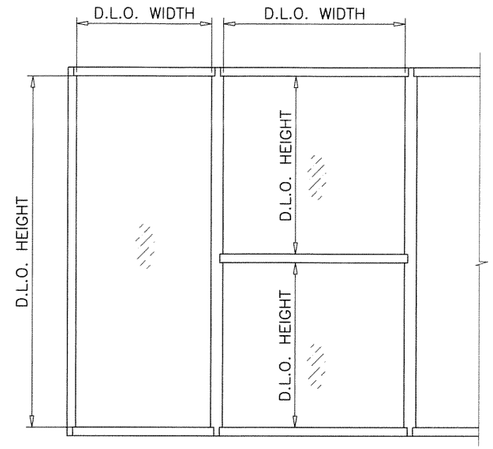

NOTE:
GLASS CAPACITIES ON THIS SHEET ARE BASED ON ASTM E1300–09 (3 SEC. GUSTS).

GLASS

FL #19002

JAVAD AHMAD
LICENSE
No. 70592
STATE OF FLORIDA
PROFESSIONAL ENGINEER

Oct 22 2015 12:35 PM

AL-FAROOQ CORPORATION
ENGINEERS & PRODUCT DEVELOPMENT
1235 S.W. 87 AVE
MIAMI, FLORIDA 33174
TEL. (305) 264-8100 FAX. (305) 262-6978

COMP–ANL\W15–74ENV

SERIES ENV–450 ALUM WINDOW WALL SYS. (L.M.I.)

ENVIRALUM INDUSTRIES INC.
5100 N.W. 72 AVENUE BLDG. C
MIAMI, FL. 33166
TEL. (305) 752–4411 FAX. (305) 406–3877

revisions:

no	date	by	description

date: 09–28–15
scale: 3/8" = 1"
dr. by: HAMID
chk. by:

drawing no.
W15–74

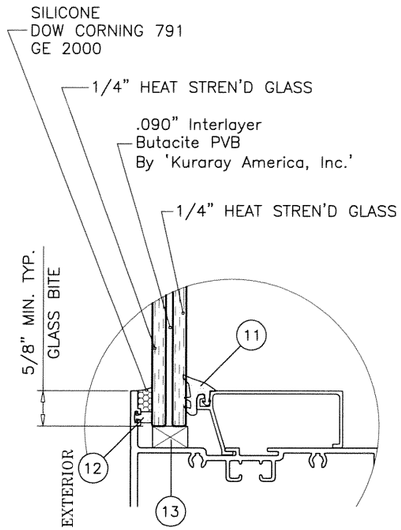

GLASS TYPE 'A'

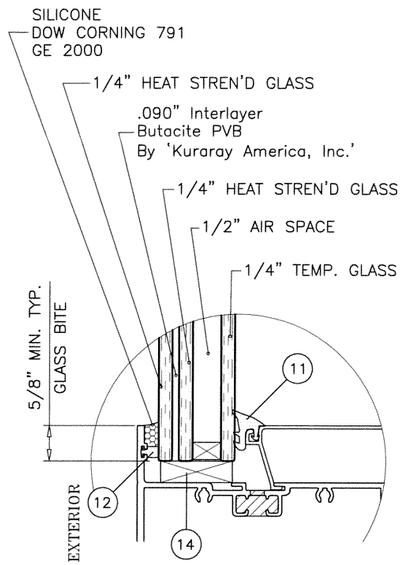

GLASS TYPE 'A1'

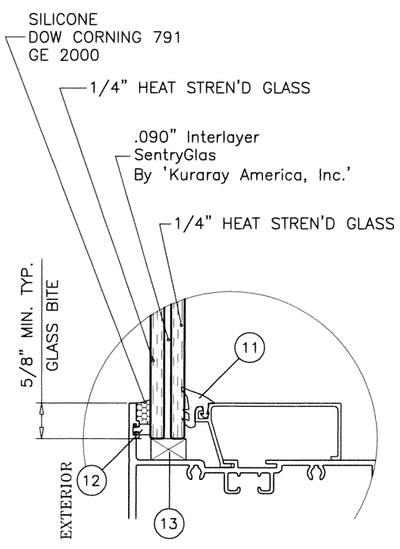

GLASS TYPE 'B'

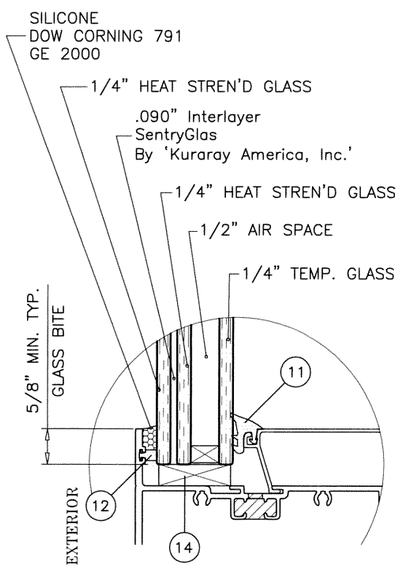

GLASS TYPE 'B1'

GLAZING OPTIONS

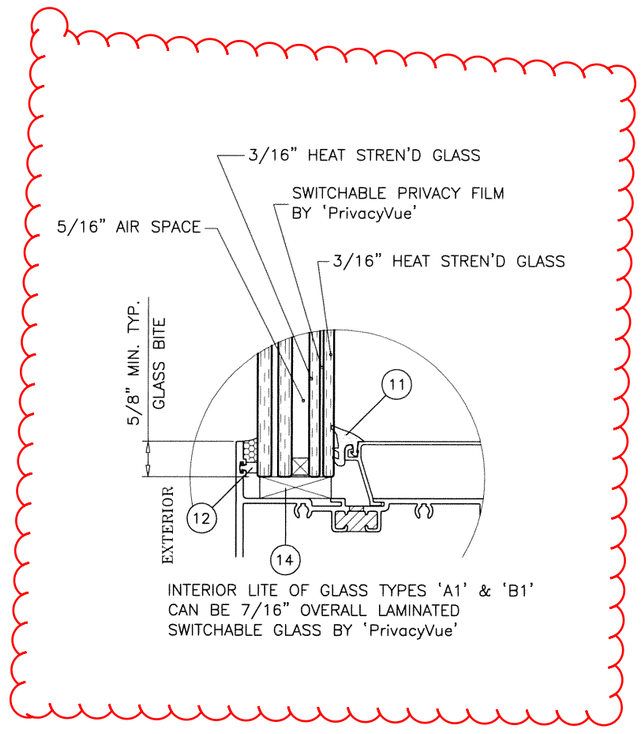

INTERIOR LITE OF GLASS TYPES 'A1' & 'B1'
CAN BE 7/16" OVERALL LAMINATED
SWITCHABLE GLASS BY 'PrivacyVue'

1/2" AIR SPACE CONSISTING OF:
SPACER:
ALUMINUM BOX SPACER AROUND
THE PERIMETER OF THE GLASS.
PERIMETER SEALANT:
SILICONE
DOW CORNING 791
GE 2000

GLASS

FL #19002

JAVAD AHMAD
LICENSE
No. 70592
STATE OF FLORIDA
PROFESSIONAL ENGINEER

Oct 22 2015 12:35 PM

AL-FAROOQ CORPORATION
ENGINEERS & PRODUCT DEVELOPMENT
1235 S.W. 87 AVE
MIAMI, FLORIDA 33174
TEL. (305) 264-8100 FAX. (305) 262-6978

COMP-ANL\W15-74ENV

SERIES ENV-450 ALUM WINDOW WALL SYS. (L.M.I.)

ENVIRALUM INDUSTRIES INC.
5100 N.W. 72 AVENUE BLDG. C
MIAMI, FL. 33166
TEL. (305) 752-4411 FAX. (305) 406-3877

revisions:

no	date	by	description

date: 09-28-15
scale: 3/8" = 1"
dr. by: HAMID
chk. by:

drawing no.
W15-74

DESIGN LOAD CAPACITY – PSF
UNSECURED JAMB/MULLION WITHOUT INTERMEDIATE HORIZONTALS

NOMINAL DIMS.		JAMB 'J1'		JAMB 'J2'		JAMB 'J3'		JAMB 'J4'	
		MULLION 'M1'		MULLION 'M2'		MULL 'M3'		MULL 'M4'	
WIDTH (W)	FRAME HEIGHT	EXT.(+)	INT.(–)	EXT.(+)	INT.(–)	EXT.(+)	INT.(–)	EXT.(+)	INT.(–)
30"	72"	80.0	80.0	85.0	85.0	90.0	90.0	100.0	131.0
36"		80.0	80.0	85.0	85.0	90.0	90.0	100.0	131.0
42"		80.0	80.0	85.0	85.0	90.0	90.0	100.0	131.0
48"		80.0	80.0	85.0	85.0	90.0	90.0	100.0	131.0
54"		80.0	80.0	85.0	85.0	90.0	90.0	100.0	131.0
60"		80.0	80.0	85.0	85.0	90.0	90.0	100.0	131.0
66"		–	–	85.0	85.0	90.0	90.0	100.0	131.0
72"		–	–	85.0	85.0	90.0	90.0	100.0	131.0
30"	78"	80.0	80.0	85.0	85.0	90.0	90.0	100.0	131.0
36"		80.0	80.0	85.0	85.0	90.0	90.0	100.0	131.0
42"		80.0	80.0	85.0	85.0	90.0	90.0	100.0	131.0
48"		80.0	80.0	85.0	85.0	90.0	90.0	100.0	131.0
54"		80.0	80.0	85.0	85.0	90.0	90.0	100.0	131.0
60"		–	–	85.0	85.0	90.0	90.0	100.0	131.0
30"	84"	80.0	80.0	85.0	85.0	90.0	90.0	100.0	131.0
36"		80.0	80.0	85.0	85.0	90.0	90.0	100.0	131.0
42"		80.0	80.0	85.0	85.0	90.0	90.0	100.0	131.0
48"		80.0	80.0	85.0	85.0	90.0	90.0	100.0	131.0
54"		80.0	80.0	85.0	85.0	90.0	90.0	100.0	131.0
60"		–	–	85.0	85.0	90.0	90.0	100.0	131.0
30"	90"	80.0	80.0	85.0	85.0	90.0	90.0	100.0	131.0
36"		80.0	80.0	85.0	85.0	90.0	90.0	100.0	131.0
42"		80.0	80.0	85.0	85.0	90.0	90.0	100.0	131.0
48"		80.0	80.0	85.0	85.0	90.0	90.0	100.0	131.0
54"		–	–	85.0	85.0	90.0	90.0	100.0	131.0
60"		–	–	–	–	90.0	90.0	100.0	131.0
30"	96"	80.0	80.0	85.0	85.0	90.0	90.0	100.0	131.0
36"		80.0	80.0	85.0	85.0	90.0	90.0	100.0	131.0
42"		80.0	80.0	85.0	85.0	90.0	90.0	100.0	131.0
48"		80.0	80.0	85.0	85.0	90.0	90.0	100.0	131.0
54"		–	–	75.6	75.6	80.0	80.0	88.9	97.8
60"		–	–	–	–	72.0	72.0	80.0	88.0
30"	102"	–	–	85.0	85.0	90.0	90.0	100.0	131.0
36"		–	–	85.0	85.0	90.0	90.0	100.0	131.0
42"		–	–	85.0	85.0	90.0	90.0	100.0	131.0
48"		–	–	85.0	85.0	90.0	90.0	100.0	131.0
54"		–	–	–	–	80.0	80.0	88.9	97.8
30"	108"	–	–	85.0	85.0	90.0	90.0	100.0	131.0
36"		–	–	85.0	85.0	90.0	90.0	100.0	131.0
42"		–	–	85.0	85.0	90.0	90.0	100.0	131.0
48"		–	–	85.0	85.0	90.0	90.0	100.0	121.9
54"		–	–	–	–	–	–	57.8	57.8
30"	114"	–	–	–	–	90.0	90.0	100.0	131.0
36"		–	–	–	–	90.0	90.0	100.0	131.0
42"		–	–	–	–	90.0	90.0	100.0	122.4
48"		–	–	–	–	90.0	90.0	100.0	108.6
54"		–	–	–	–	–	–	57.8	57.8
30"	120"	–	–	–	–	90.0	90.0	100.0	131.0
36"		–	–	–	–	90.0	90.0	100.0	126.9
42"		–	–	–	–	90.0	90.0	100.0	110.0
48"		–	–	–	–	87.9	87.9	97.4	97.4
54"		–	–	–	–	–	–	57.8	57.8
30"	126"	–	–	–	–	–	–	65.0	65.0
36"		–	–	–	–	–	–	65.0	65.0
42"		–	–	–	–	–	–	65.0	65.0
48"		–	–	–	–	–	–	65.0	65.0
54"		–	–	–	–	–	–	57.8	57.8
30"	132"	–	–	–	–	–	–	65.0	65.0
36"		–	–	–	–	–	–	65.0	65.0
42"		–	–	–	–	–	–	65.0	65.0
48"		–	–	–	–	–	–	65.0	65.0

DESIGN LOAD CAPACITY – PSF
UNSECURED JAMB/MULLION WITHOUT INTERMEDIATE HORIZONTALS

NOMINAL DIMS.		JAMB 'J1'		JAMB 'J2'		JAMB 'J3'		JAMB 'J4'	
		MULLION 'M1'		MULLION 'M2'		MULL 'M3'		MULL 'M4'	
WIDTH (W)	FRAME HEIGHT	EXT.(+)	INT.(–)	EXT.(+)	INT.(–)	EXT.(+)	INT.(–)	EXT.(+)	INT.(–)
30"	138"	–	–	–	–	–	–	65.0	65.0
36"		–	–	–	–	–	–	65.0	65.0
42"		–	–	–	–	–	–	65.0	65.0
48"		–	–	–	–	–	–	65.0	65.0
30"	144"	–	–	–	–	–	–	65.0	65.0
36"		–	–	–	–	–	–	65.0	65.0
42"		–	–	–	–	–	–	65.0	65.0
48"		–	–	–	–	–	–	65.0	65.0

FOR SECURED JAMBS CONDITION
SEE SHEET 9 OF 12.

UNSECURED JAMBS

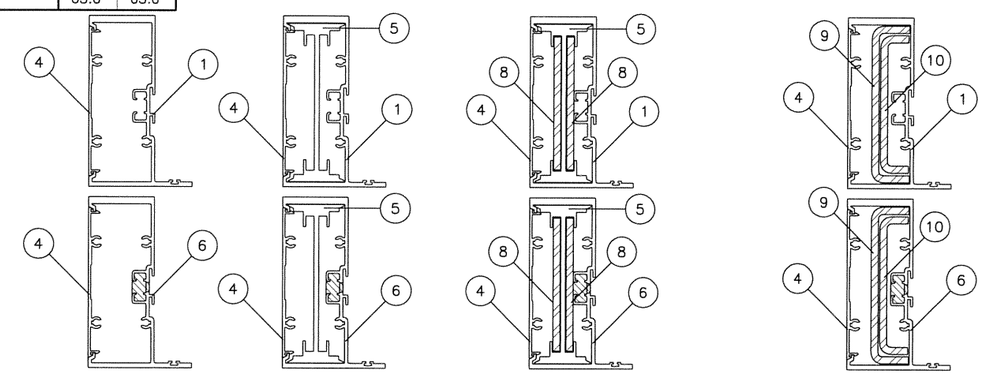

JAMB 'J1'

Ix IN^4	Sx IN^3
4.5110	1.9537

JAMB 'J2'

Ix IN^4	Sx IN^3
6.2170	2.6925

JAMB 'J3'

	Ix IN^4	Sx IN^3
ALUMINUM	6.2170	2.6925
STEEL	1.3650	.7746
TOTAL Ix ALUM + Ix STL X 2.9	10.1755	

JAMB 'J4'

	Ix IN^4	Sx IN^3
ALUMINUM	4.5110	1.9537
STEEL	3.5210	1.7072
TOTAL Ix ALUM + Ix STL X 2.9	14.7219	

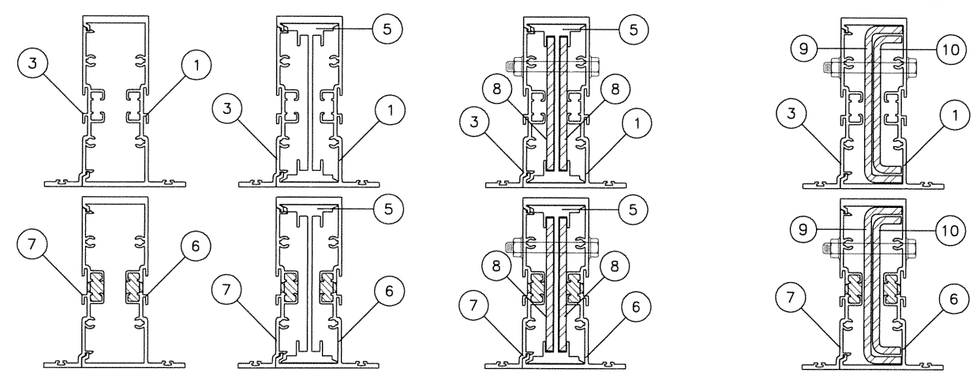

MULLION 'M1'

Ix IN^4	Sx IN^3
5.1380	2.1170

MULLION 'M2'

Ix IN^4	Sx IN^3
7.8700	3.2427

MULLION 'M3'

	Ix IN^4	Sx IN^3
ALUMINUM	7.8700	3.2427
STEEL	1.3650	.7746
TOTAL Ix ALUM + Ix STL X 2.9	11.8285	

MULLION 'M4'

	Ix IN^4	Sx IN^3
ALUMINUM	5.1380	2.1170
STEEL	3.5210	1.7072
TOTAL Ix ALUM + Ix STL X 2.9	15.3489	

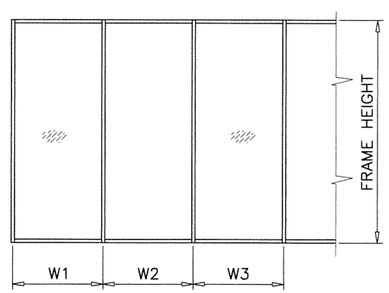

WIDTH (W) = W1
AT FRAME JAMB

WIDTH (W) = $\frac{W2 + W3}{2}$
AT FRAME MULLION

MULLIONS

FL #19002

JAVAD AHMAD
LICENSE
No. 70592
STATE OF FLORIDA
PROFESSIONAL ENGINEER

Oct 22 2015 12:35 PM

AL-FAROOQ CORPORATION
ENGINEERS & PRODUCT DEVELOPMENT
1235 S.W. 87 AVE
MIAMI, FLORIDA 33174
TEL. (305) 264-8100 FAX. (305) 262-6978
COMP-ANL\W15-74ENV

SERIES ENV-450 ALUM WINDOW WALL SYS. (L.M.I.)

ENVIRALUM INDUSTRIES INC.
5100 N.W. 72 AVENUE BLDG. C
MIAMI, FL. 33166
TEL. (305) 752-4411 FAX. (305) 406-3877

revisions:

no	date	by	description

date: 09-28-15
scale: –
dr. by: HAMID
chk. by:

drawing no. W15-74

DESIGN LOAD CAPACITY – PSF
UNSECURED JAMB/MULLION WITH INTERMEDIATE HORIZONTALS

NOMINAL DIMS.		JAMB 'J1' MULLION 'M1'		JAMB 'J2' MULLION 'M2'		JAMB 'J3' MULL 'M3'		JAMB 'J4' MULL 'M4'	
WIDTH (W)	FRAME HEIGHT	EXT.(+)	INT.(–)	EXT.(+)	INT.(–)	EXT.(+)	INT.(–)	EXT.(+)	INT.(–)
30"	72"	80.0	80.0	85.0	85.0	90.0	90.0	100.0	131.0
36"		80.0	80.0	85.0	85.0	90.0	90.0	100.0	131.0
42"		80.0	80.0	85.0	85.0	90.0	90.0	100.0	131.0
48"		80.0	80.0	85.0	85.0	90.0	90.0	100.0	131.0
54"		80.0	80.0	85.0	85.0	90.0	90.0	100.0	131.0
60"		80.0	80.0	85.0	85.0	90.0	90.0	100.0	131.0
66"		–	–	85.0	85.0	90.0	90.0	100.0	131.0
72"		–	–	85.0	85.0	90.0	90.0	100.0	131.0
30"	78"	80.0	80.0	85.0	85.0	90.0	90.0	100.0	131.0
36"		80.0	80.0	85.0	85.0	90.0	90.0	100.0	131.0
42"		80.0	80.0	85.0	85.0	90.0	90.0	100.0	131.0
48"		80.0	80.0	85.0	85.0	90.0	90.0	100.0	131.0
54"		80.0	80.0	85.0	85.0	90.0	90.0	100.0	131.0
60"		–	–	85.0	85.0	90.0	90.0	100.0	131.0
30"	84"	80.0	80.0	85.0	85.0	90.0	90.0	100.0	131.0
36"		80.0	80.0	85.0	85.0	90.0	90.0	100.0	131.0
42"		80.0	80.0	85.0	85.0	90.0	90.0	100.0	131.0
48"		80.0	80.0	85.0	85.0	90.0	90.0	100.0	131.0
54"		80.0	80.0	85.0	85.0	90.0	90.0	100.0	131.0
60"		–	–	85.0	85.0	90.0	90.0	100.0	131.0
30"	90"	80.0	80.0	85.0	85.0	90.0	90.0	100.0	131.0
36"		80.0	80.0	85.0	85.0	90.0	90.0	100.0	131.0
42"		80.0	80.0	85.0	85.0	90.0	90.0	100.0	131.0
48"		80.0	80.0	85.0	85.0	90.0	90.0	100.0	131.0
54"		–	–	85.0	85.0	90.0	90.0	100.0	131.0
60"		–	–	–	–	90.0	90.0	100.0	131.0
30"	96"	80.0	80.0	85.0	85.0	90.0	90.0	100.0	131.0
36"		80.0	80.0	85.0	85.0	90.0	90.0	100.0	131.0
42"		80.0	80.0	85.0	85.0	90.0	90.0	100.0	131.0
48"		74.3	74.3	85.0	85.0	90.0	90.0	100.0	131.0
54"		–	–	75.6	75.6	80.0	80.0	88.9	97.8
60"		–	–	–	–	72.0	72.0	80.0	88.0
30"	102"	–	–	85.0	85.0	90.0	90.0	100.0	131.0
36"		–	–	85.0	85.0	90.0	90.0	100.0	131.0
42"		–	–	85.0	85.0	90.0	90.0	100.0	131.0
48"		–	–	85.0	85.0	90.0	90.0	100.0	127.9
54"		–	–	–	–	80.0	80.0	88.9	97.8
30"	108"	–	–	85.0	85.0	90.0	90.0	100.0	131.0
36"		–	–	85.0	85.0	90.0	90.0	100.0	131.0
42"		–	–	85.0	85.0	90.0	90.0	100.0	130.3
48"		–	–	85.0	85.0	90.0	90.0	100.0	114.1
54"		–	–	–	–	–	–	57.8	57.8
30"	114"	–	–	–	–	90.0	90.0	100.0	131.0
36"		–	–	–	–	90.0	90.0	100.0	131.0
42"		–	–	–	–	90.0	90.0	100.0	117.0
48"		–	–	–	–	90.0	90.0	100.0	102.4
54"		–	–	–	–	–	–	57.8	57.8
30"	120"	–	–	–	–	90.0	90.0	100.0	131.0
36"		–	–	–	–	90.0	90.0	100.0	123.2
42"		–	–	–	–	90.0	90.0	100.0	105.6
48"		–	–	–	–	83.3	83.3	92.4	92.4
54"		–	–	–	–	–	–	57.8	57.8
30"	126"	–	–	–	–	–	–	65.0	65.0
36"		–	–	–	–	–	–	65.0	65.0
42"		–	–	–	–	–	–	65.0	65.0
48"		–	–	–	–	–	–	65.0	65.0
54"		–	–	–	–	–	–	57.8	57.8
30"	132"	–	–	–	–	–	–	65.0	65.0
36"		–	–	–	–	–	–	65.0	65.0
42"		–	–	–	–	–	–	65.0	65.0
48"		–	–	–	–	–	–	65.0	65.0

DESIGN LOAD CAPACITY – PSF
UNSECURED JAMB/MULLION WITH INTERMEDIATE HORIZONTALS

NOMINAL DIMS.		JAMB 'J1' MULLION 'M1'		JAMB 'J2' MULLION 'M2'		JAMB 'J3' MULL 'M3'		JAMB 'J4' MULL 'M4'	
WIDTH (W)	FRAME HEIGHT	EXT.(+)	INT.(–)	EXT.(+)	INT.(–)	EXT.(+)	INT.(–)	EXT.(+)	INT.(–)
30"	138"	–	–	–	–	–	–	65.0	65.0
36"		–	–	–	–	–	–	65.0	65.0
42"		–	–	–	–	–	–	65.0	65.0
48"		–	–	–	–	–	–	65.0	65.0
30"	144"	–	–	–	–	–	–	65.0	65.0
36"		–	–	–	–	–	–	65.0	65.0
42"		–	–	–	–	–	–	65.0	65.0
48"		–	–	–	–	–	–	64.2	64.2

FOR SECURED JAMBS CONDITION
SEE SHEET 9 OF 12.

UNSECURED JAMBS

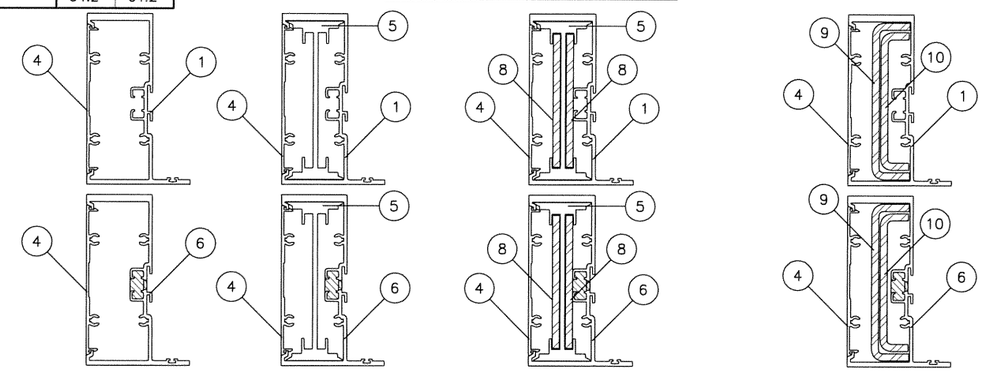

JAMB 'J1'

Ix IN^4	Sx IN^3
4.5110	1.9537

JAMB 'J2'

Ix IN^4	Sx IN^3
6.2170	2.6925

JAMB 'J3'

	Ix IN^4	Sx IN^3
ALUMINUM	6.2170	2.6925
STEEL	1.3650	.7746
TOTAL Ix ALUM + Ix STL X 2.9	10.1755	

JAMB 'J4'

	Ix IN^4	Sx IN^3
ALUMINUM	4.5110	1.9537
STEEL	3.5210	1.7072
TOTAL Ix ALUM + Ix STL X 2.9	14.7219	

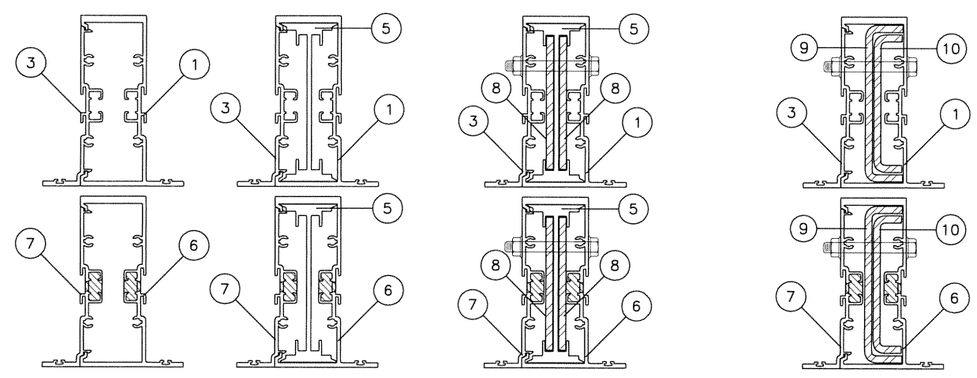

MULLION 'M1'

Ix IN^4	Sx IN^3
5.1380	2.1170

MULLION 'M2'

Ix IN^4	Sx IN^3
7.8700	3.2427

MULLION 'M3'

	Ix IN^4	Sx IN^3
ALUMINUM	7.8700	3.2427
STEEL	1.3650	.7746
TOTAL Ix ALUM + Ix STL X 2.9	11.8285	

MULLION 'M4'

	Ix IN^4	Sx IN^3
ALUMINUM	5.1380	2.1170
STEEL	3.5210	1.7072
TOTAL Ix ALUM + Ix STL X 2.9	15.3489	

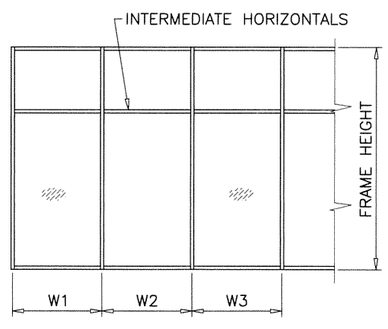

WIDTH (W) = W1
AT FRAME JAMB

WIDTH (W) = $\frac{W2 + W3}{2}$
AT FRAME MULLION

MULLIONS

FL #19002

JAVAD AHMAD
LICENSE
No. 70592
STATE OF FLORIDA
PROFESSIONAL ENGINEER

Oct 22 2015 12:35 PM

AL-FAROOQ CORPORATION
ENGINEERS & PRODUCT DEVELOPMENT
1235 S.W. 87 AVE
MIAMI, FLORIDA 33174
TEL. (305) 264-8100 FAX. (305) 262-6978

COMP–ANL\W15–74ENV

SERIES ENV–450 ALUM WINDOW WALL SYS. (L.M.I.)

ENVIRALUM INDUSTRIES INC.
5100 N.W. 72 AVENUE BLDG. C
MIAMI, FL. 33166
TEL. (305) 752–4411 FAX. (305) 406–3877

revisions:		
no	date	by description

date: 09–28–15
scale: –
dr. by: HAMID
chk. by:

drawing no. W15–74

ANCHOR LOAD CAPACITY – PSF EXT.(+) & INT.(–)							
NOMINAL DIMS.		3/8" MAX. SHIM SPACE					
WIDTH (W)	FRAME HEIGHT	A2/B2	C2/D2	E2	A3/B3	C3/D3	E3
30"	72"	74.0	131.0	99.3	111.1	131.0	131.0
36"		61.7	116.0	82.8	92.6	131.0	124.2
42"		52.9	99.4	71.0	79.3	131.0	106.5
48"		46.3	87.0	62.1	69.4	130.6	93.2
54"		41.1	77.3	55.2	61.7	116.1	82.8
60"		37.0	69.6	49.7	55.5	104.5	74.5
66"		33.6	63.3	45.2	50.5	95.0	67.8
72"		30.8	58.0	41.4	46.3	87.1	62.1
30"	78"	68.3	128.5	91.7	102.5	131.0	131.0
36"		56.9	107.1	76.4	85.4	131.0	114.7
42"		48.8	91.8	65.5	73.2	131.0	98.3
48"		42.7	80.3	57.3	64.1	120.5	86.0
54"		37.9	71.4	50.9	57.0	107.1	76.4
60"		34.2	64.2	45.8	51.3	96.4	68.8
30"	84"	63.4	119.3	85.1	95.2	131.0	127.8
36"		52.9	99.4	71.0	79.3	131.0	106.5
42"		45.3	85.2	60.8	68.0	127.9	91.3
48"		39.6	74.6	53.2	59.5	111.9	79.9
54"		35.2	66.3	47.3	52.9	99.5	71.0
60"		31.7	59.7	42.6	47.6	89.5	63.9
30"	90"	59.2	111.4	79.5	88.9	131.0	119.3
36"		49.3	92.8	66.2	74.0	131.0	99.4
42"		42.3	79.5	56.8	63.5	119.4	85.2
48"		37.0	69.6	49.7	55.5	104.5	74.5
54"		32.9	61.9	44.1	49.4	92.9	66.3
60"		29.6	55.7	39.7	44.4	83.6	59.6
30"	96"	55.5	104.4	74.5	83.3	131.0	111.8
36"		46.3	87.0	62.1	69.4	130.6	93.2
42"		39.6	74.6	53.2	59.5	111.9	79.9
48"		34.7	65.3	46.6	52.1	97.9	69.9
54"		30.8	58.0	41.4	46.3	87.1	62.1
60"		27.8	52.2	37.3	41.7	78.4	55.9
30"	102"	52.2	98.3	70.1	78.4	131.0	105.2
36"		43.5	81.9	58.4	65.3	122.9	87.7
42"		37.3	70.2	50.1	56.0	105.3	75.2
48"		32.6	61.4	43.8	49.0	92.2	65.8
54"		29.0	54.6	39.0	43.6	81.9	58.5
60"		26.1	49.1	35.1	39.2	73.7	52.6
30"	108"	49.3	92.8	66.2	74.0	131.0	99.4
36"		41.1	77.3	55.2	61.7	116.1	82.8
42"		35.2	66.3	47.3	52.9	99.5	71.0
48"		30.8	58.0	41.4	46.3	87.1	62.1
54"		27.4	51.6	36.8	41.1	77.4	55.2
60"		24.7	46.4	33.1	37.0	69.6	49.7
30"	114"	46.7	87.9	62.7	70.1	131.0	94.1
36"		38.9	73.3	52.3	58.5	110.0	78.5
42"		33.4	62.8	44.8	50.1	94.3	67.2
48"		29.2	54.9	39.2	43.8	82.5	58.8
54"		26.0	48.8	34.9	39.0	73.3	52.3
60"		23.4	44.0	31.4	35.1	66.0	47.1
30"	120"	44.4	83.5	59.6	66.6	125.4	89.4
36"		37.0	69.6	49.7	55.5	104.5	74.5
42"		31.7	59.7	42.6	47.6	89.5	63.9
48"		27.8	52.2	37.3	41.7	78.4	55.9
54"		24.7	46.4	33.1	37.0	69.6	49.7
30"	126"	42.3	79.5	56.8	63.5	119.4	85.2
36"		35.2	66.3	47.3	52.9	99.5	71.0
42"		30.2	56.8	40.5	45.3	85.3	60.8
48"		26.4	49.7	35.5	39.7	74.6	53.2
54"		23.5	44.2	31.5	35.3	66.3	47.3

ANCHOR LOAD CAPACITY – PSF EXT.(+) & INT.(–)							
NOMINAL DIMS.		3/8" MAX. SHIM SPACE					
WIDTH (W)	FRAME HEIGHT	A2/B2	C2/D2	E2	A3/B3	C3/D3	E3
30"	132"	40.4	75.9	54.2	60.6	114.0	81.3
36"		33.6	63.3	45.2	50.5	95.0	67.8
42"		28.8	54.2	38.7	43.3	81.4	58.1
48"		25.2	47.5	33.9	37.9	71.2	50.8
30"	138"	38.6	72.6	51.8	57.9	109.0	77.8
36"		32.2	60.5	43.2	48.3	90.8	64.8
42"		27.6	51.9	37.0	41.4	77.9	55.6
48"		24.1	45.4	32.4	36.2	68.1	48.6
30"	144"	37.0	69.6	49.7	55.5	104.5	74.5
36"		30.8	58.0	41.4	46.3	87.1	62.1
42"		26.4	49.7	35.5	39.7	74.6	53.2
48"		23.1	43.5	31.0	34.7	65.3	46.6

WOOD BUCKS AND METAL STRUCTURE NOT BY ENVIRALUM MUST SUSTAIN LOADS IMPOSED BY GLAZING SYSTEM AND TRANSFER THEM TO THE BUILDING STRUCTURE.

TYPICAL ANCHORS: SEE ELEV. FOR SPACING

TYPE 'A'– 1/4" DIA ULTRACON BY 'ELCO' (Fu=177 KSI, Fy=155 KSI)
INTO 2BY WOOD BUCKS OR WOOD STRUCTURES
WITH 1–1/2" MIN. PENETRATION INTO WOOD

THRU 1BY WOOD BUCKS INTO CONCRETE
WITH 1–1/4" MIN. EMBED INTO CONCRETE

TYPE 'B'– 1/4" DIA ULTRACON BY 'ELCO' (Fu=177 KSI, Fy=155 KSI)
DIRECTLY INTO CONCRETE OR MASONRY
WITH 1–1/4" MIN. EMBED INTO CONC. OR MASONRY

ANCHOR EDGE DISTANCES
INTO CONCRETE AND MASONRY = 2–1/2" MIN.
INTO WOOD STRUCTURE = 1" MIN.

TYPE 'C'– 5/16" DIA ULTRACON BY 'ELCO' (Fu=177 KSI, Fy=155 KSI)
INTO WOOD STRUCTURES
WITH 1–7/8" MIN. PENETRATION INTO WOOD

THRU 1BY OR 2BY WOOD BUCKS INTO CONCRETE
WITH 1–1/4" MIN. EMBED INTO CONCRETE

TYPE 'D'– 5/16" DIA ULTRACON BY 'ELCO' (Fu=177 KSI, Fy=155 KSI)
DIRECTLY INTO CONCRETE OR MASONRY
WITH 1–1/4" MIN. EMBED INTO CONC. OR MASONRY

ANCHOR EDGE DISTANCES
INTO CONCRETE AND MASONRY = 3" MIN.
INTO WOOD STRUCTURE = 1–1/4" MIN.

TYPE 'E'– 1/4" DIA. TEKS OR SELF DRILLING SCREWS ST/ST (GRADE 5 CRS)
INTO METAL STRUCTURES
STEEL : 12 GA. MIN. (Fy = 36 KSI MIN.)
ALUMINUM : 1/8" THK. MIN. (6063–T5 MIN.)
(STEEL IN CONTACT WITH ALUMINUM TO BE PLATED OR PAINTED)

ANCHOR EDGE DISTANCES
INTO METAL STRUCTURE = 1/2" MIN.

CONCRETE AT HEAD, SILL OR JAMBS f'c = 3000 PSI MIN.
C–90 HOLLOW/FILLED BLOCK AT JAMBS f'm = 2000 PSI MIN.

ANCHORS
3/8" SHIMS

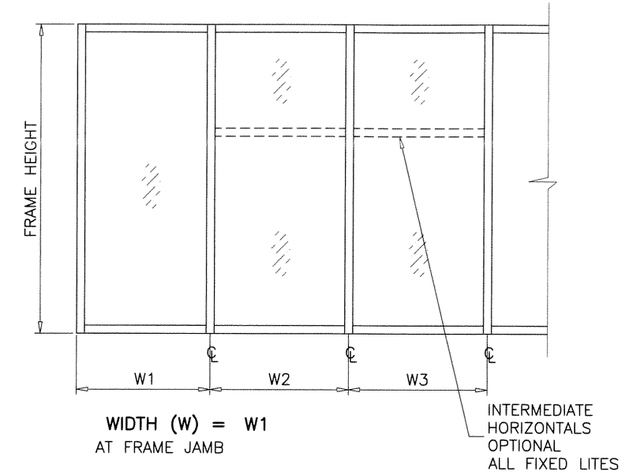

WIDTH (W) = W1
AT FRAME JAMB

WIDTH (W) = $\frac{W2 + W3}{2}$
AT FRAME MULLION

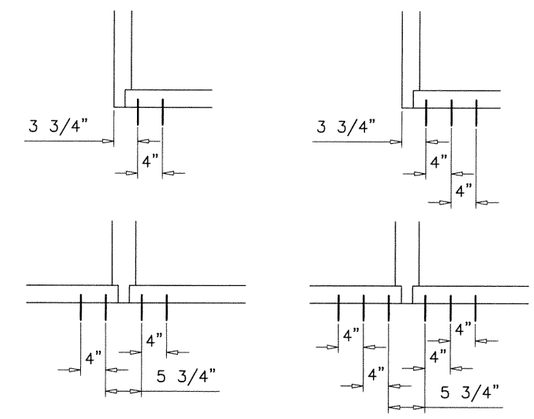

A2, B2, C2, D2, E2 — A3, B3, C3, D3, E3

ANCHORS TYPES:

A2 = (2) ANCHORS TYPE 'A' AT EACH SIDE OF JAMB AND MULLION
B2 = (2) ANCHORS TYPE 'B' AT EACH SIDE OF JAMB AND MULLION
C2 = (2) ANCHORS TYPE 'C' AT EACH SIDE OF JAMB AND MULLION
D2 = (2) ANCHORS TYPE 'D' AT EACH SIDE OF JAMB AND MULLION
E2 = (2) ANCHORS TYPE 'E' AT EACH SIDE OF JAMB AND MULLION

A3 = (3) ANCHORS TYPE 'A' AT EACH SIDE OF JAMB AND MULLION
B3 = (3) ANCHORS TYPE 'B' AT EACH SIDE OF JAMB AND MULLION
C3 = (3) ANCHORS TYPE 'C' AT EACH SIDE OF JAMB AND MULLION
D3 = (3) ANCHORS TYPE 'D' AT EACH SIDE OF JAMB AND MULLION
E3 = (3) ANCHORS TYPE 'E' AT EACH SIDE OF JAMB AND MULLION

JAVAD AHMAD
LICENSE
No. 70592
STATE OF FLORIDA
PROFESSIONAL ENGINEER

FL #19002

Oct 22 2015 12:35 PM

AL-FAROOQ CORPORATION
ENGINEERS & PRODUCT DEVELOPMENT
1235 S.W. 87 AVE
MIAMI, FLORIDA 33174
TEL. (305) 264-8100 FAX. (305) 262-6978
COMP–ANL\W15–74ENV

SERIES ENV–450 ALUM WINDOW WALL SYS. (L.M.I.)
ENVIRALUM INDUSTRIES INC.
5100 N.W. 72 AVENUE BLDG. C
MIAMI, FL. 33166
TEL. (305) 752–4411 FAX. (305) 406–3877

revisions:

no	date	by	description

date: 09–28–15
scale: –
dr. by: HAMID
chk. by:

drawing no. W15–74

ANCHOR LOAD CAPACITY – PSF
EXT.(+) & INT.(–)

NOMINAL DIMS.		1/4" MAX. SHIM SPACE					
WIDTH (W)	FRAME HEIGHT	A2/B2	C2/D2	E2	A3/B3	C3/D3	E3
30"	72"	131.0	131.0	131.0	131.0	131.0	131.0
36"		113.0	128.0	131.0	131.0	131.0	131.0
42"		97.5	109.7	131.0	131.0	131.0	131.0
48"		85.3	96.0	127.7	128.0	131.0	131.0
54"		75.9	85.3	113.5	113.8	128.0	131.0
60"		68.3	76.8	102.1	102.4	115.2	131.0
66"		62.1	69.8	92.8	93.1	104.7	131.0
72"		56.9	64.0	85.1	85.3	96.0	127.7
30"	78"	126.0	131.0	131.0	131.0	131.0	131.0
36"		105.0	118.2	131.0	131.0	131.0	131.0
42"		90.0	101.3	131.0	131.0	131.0	131.0
48"		78.8	88.6	117.8	118.2	131.0	131.0
54"		70.0	78.8	104.8	105.0	118.2	131.0
60"		63.0	70.9	94.3	94.5	106.3	131.0
30"	84"	117.0	131.0	131.0	131.0	131.0	131.0
36"		97.5	109.7	131.0	131.0	131.0	131.0
42"		83.6	94.0	125.1	125.4	131.0	131.0
48"		73.1	82.3	109.4	109.7	123.4	131.0
54"		65.0	73.1	97.3	97.5	109.7	131.0
60"		58.5	65.8	87.5	87.8	98.7	131.0
30"	90"	109.2	122.9	131.0	131.0	131.0	131.0
36"		91.0	102.4	131.0	131.0	131.0	131.0
42"		78.0	87.8	116.7	117.0	131.0	131.0
48"		68.3	76.8	102.1	102.4	115.2	131.0
54"		60.7	68.3	90.8	91.0	102.4	131.0
60"		54.6	61.4	81.7	81.9	92.2	122.6
30"	96"	102.4	115.2	131.0	131.0	131.0	131.0
36"		85.3	96.0	127.7	128.0	131.0	131.0
42"		73.1	82.3	109.4	109.7	123.4	131.0
48"		64.0	72.0	95.8	96.0	108.0	131.0
54"		56.9	64.0	85.1	85.3	96.0	127.7
60"		51.2	57.6	76.6	76.8	86.4	114.9
30"	102"	96.4	108.4	131.0	131.0	131.0	131.0
36"		80.3	90.4	120.2	120.5	131.0	131.0
42"		68.8	77.4	103.0	103.3	116.2	131.0
48"		60.2	67.8	90.1	90.4	101.6	131.0
54"		53.5	60.2	80.1	80.3	90.4	120.2
60"		48.2	54.2	72.1	72.3	81.3	108.1
30"	108"	91.0	102.4	131.0	131.0	131.0	131.0
36"		75.9	85.3	113.5	113.8	128.0	131.0
42"		65.0	73.1	97.3	97.5	109.7	131.0
48"		56.9	64.0	85.1	85.3	96.0	127.7
54"		50.6	56.9	75.7	75.9	85.3	113.5
60"		45.5	51.2	68.1	68.3	76.8	102.1
30"	114"	86.2	97.0	129.0	129.3	131.0	131.0
36"		71.9	80.8	107.5	107.8	121.3	131.0
42"		61.6	69.3	92.2	92.4	103.9	131.0
48"		53.9	60.6	80.6	80.8	90.9	120.9
54"		47.9	53.9	71.7	71.9	80.8	107.5
60"		43.1	48.5	64.5	64.7	72.8	96.8
30"	120"	81.9	92.2	122.6	122.9	131.0	131.0
36"		68.3	76.8	102.1	102.4	115.2	131.0
42"		58.5	65.8	87.5	87.8	98.7	131.0
48"		51.2	57.6	76.6	76.8	86.4	114.9
54"		45.5	51.2	68.1	68.3	76.8	102.1
30"	126"	78.0	87.8	116.7	117.0	131.0	131.0
36"		65.0	73.1	97.3	97.5	109.7	131.0
42"		55.7	62.7	83.4	83.6	94.0	125.1
48"		48.8	54.9	73.0	73.1	82.3	109.4
54"		43.3	48.8	64.8	65.0	73.1	97.3

ANCHOR LOAD CAPACITY – PSF
EXT.(+) & INT.(–)

NOMINAL DIMS.		1/4" MAX. SHIM SPACE					
WIDTH (W)	FRAME HEIGHT	A2/B2	C2/D2	E2	A3/B3	C3/D3	E3
30"	132"	74.5	83.8	111.4	111.7	125.7	131.0
36"		62.1	69.8	92.8	93.1	104.7	131.0
42"		53.2	59.8	79.6	79.8	89.8	119.4
48"		46.5	52.4	69.6	69.8	78.5	104.5
30"	138"	71.2	80.1	106.6	106.9	120.2	131.0
36"		59.4	66.8	88.8	89.0	100.2	131.0
42"		50.9	57.2	76.1	76.3	85.9	114.2
48"		44.5	50.1	66.6	66.8	75.1	99.9
30"	144"	68.3	76.8	102.1	102.4	115.2	131.0
36"		56.9	64.0	85.1	85.3	96.0	127.7
42"		48.8	54.9	73.0	73.1	82.3	109.4
48"		42.7	48.0	63.8	64.0	72.0	95.8

ANCHORS
1/4" SHIMS

FL #19002

JAVAD AHMAD
LICENSE
No. 70592
STATE OF FLORIDA
PROFESSIONAL ENGINEER

Oct 22 2015 12:37 PM

AL-FAROOQ CORPORATION
ENGINEERS & PRODUCT DEVELOPMENT
1235 S.W. 87 AVE
MIAMI, FLORIDA 33174
TEL. (305) 264-8100 FAX. (305) 262-6978

COMP–ANL\W15–74ENV

SERIES ENV–450 ALUM WINDOW WALL SYS. (L.M.I.)

ENVIRALUM INDUSTRIES INC.
5100 N.W. 72 AVENUE BLDG. C
MIAMI, FL. 33166
TEL. (305) 752–4411 FAX. (305) 406–3877

revisions:

no	date	by	description

date: 09–28–15
scale: –
dr. by: HAMID
chk. by:

drawing no.
W15–74

sheet 5.1 of 12

DOOR MULLION LOAD CAPACITY			
NOMINAL DIMS.		WITH REINF.	
WIDTH (W)	FRAME HEIGHT	EXT.(+)	INT.(−)
40−3/4"	102"	75.0	75.0
43−3/4"		75.0	75.0
46−3/4"		75.0	75.0
49−3/4"		75.0	75.0
52−3/4"		75.0	75.0
55−3/4"		75.0	75.0
40−3/4"	108"	75.0	75.0
43−3/4"		75.0	75.0
46−3/4"		75.0	75.0
49−3/4"		75.0	75.0
52−3/4"		75.0	75.0
52−3/4"		75.0	75.0
40−3/4"	114"	75.0	75.0
43−3/4"		75.0	75.0
46−3/4"		75.0	75.0
49−3/4"		75.0	75.0
40−3/4"	120"	75.0	75.0
43−3/4"		75.0	75.0
46−3/4"		72.2	72.2
49−3/4"		67.9	67.9

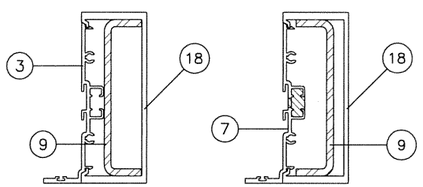

DOOR MULLION
WITH REINF.

	Ix IN^4	Sx IN^3
ALUMINUM	5.0950	2.0993
STEEL	2.2740	1.1025
TOTAL Ix ALUM + Ix STL X 2.9	11.6896	

ANCHOR TYPES	TOTAL NO. OF ANCHORS AT DOOR MULLION HEAD
A	14
B	8
C	8
D	8
E	10

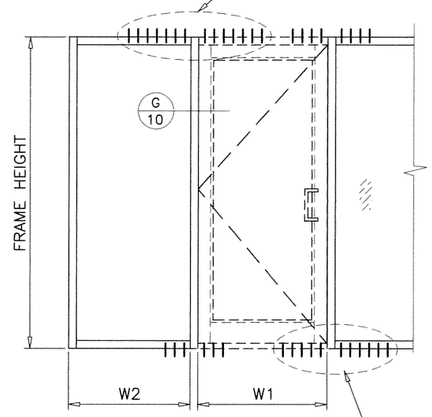

$$\text{WIDTH (W)} = \frac{W1 + W2}{2} + 1.750$$

ANCHOR TYPES	TOTAL NO. OF ANCHORS AT DOOR MULLION BOTTOM
B	11
D	6

ENVIRALUM
ENTRANCE DOORS
SEE SEPARATE APPROVAL

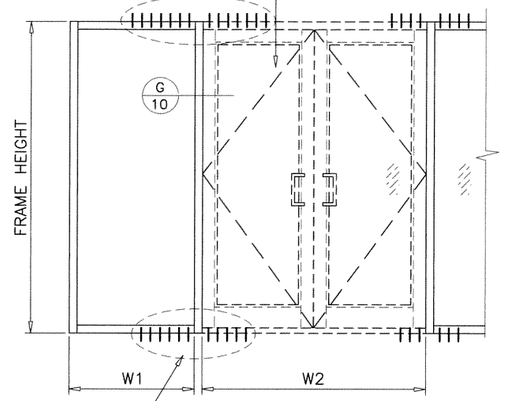

$$\text{WIDTH (W)} = \frac{W1}{2} + \frac{W2}{4} + 1.750$$

ANCHOR TYPES	TOTAL NO. OF ANCHORS AT DOOR MULLION HEAD
A	14
B	8
C	8
D	8
E	10

ENVIRALUM
ENTRANCE DOORS
SEE SEPARATE APPROVAL

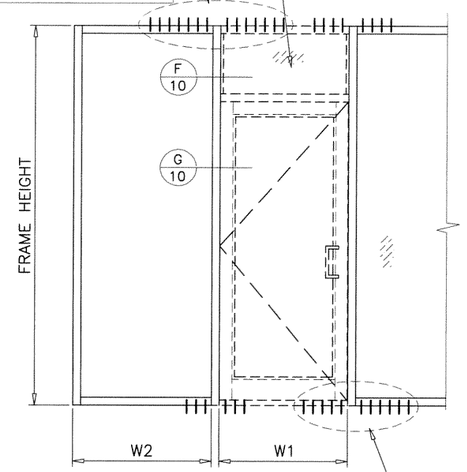

$$\text{WIDTH (W)} = \frac{W1 + W2}{2} + 1.750$$

ANCHOR TYPES	TOTAL NO. OF ANCHORS AT DOOR MULLION BOTTOM
B	11
D	6

DOOR MULLION

FL #19002

JAVAD AHMAD
LICENSE
No. 70592
STATE OF FLORIDA
PROFESSIONAL ENGINEER

Oct 22 2015 12:37 PM

AL-FAROOQ CORPORATION
ENGINEERS & PRODUCT DEVELOPMENT
1235 S.W. 87 AVE
MIAMI, FLORIDA 33174
TEL. (305) 264-8100 FAX. (305) 262-6978

COMP−ANL\W15−74ENV

SERIES ENV−450 ALUM WINDOW WALL SYS. (L.M.I.)

ENVIRALUM INDUSTRIES INC.
5100 N.W. 72 AVENUE BLDG. C
MIAMI, FL. 33166
TEL. (305) 752−4411 FAX. (305) 406−3877

revisions:			
no	date	by	description

date: 09−28−15
scale: −
dr. by: HAMID
chk. by:

drawing no.
W15−74

DOOR MULLION LOAD CAPACITY – PSF

NOMINAL DIMS.				WITH REINF.
FRAME HEIGHT INCHES	DOOR HEIGHT INCHES	WIDTH (W1) INCHES	WIDTH (W2) INCHES	EXT. (+) INT. (–)
102	80	60	30	75.0
			36	75.0
			42	75.0
			48	75.0
		72	30	75.0
			36	75.0
			42	75.0
			48	75.0
		84	30	75.0
			36	75.0
			42	75.0
			48	75.0
		96	30	75.0
			36	75.0
			42	75.0
			48	75.0
108	80	60	30	75.0
			36	75.0
			42	75.0
			48	75.0
		72	30	75.0
			36	75.0
			42	75.0
			48	72.6
		84	30	75.0
			36	75.0
			42	75.0
			48	72.6
		96	30	75.0
			36	74.2
			42	70.5
			48	67.2
114	80	60	30	75.0
			36	75.0
			42	75.0
			48	75.0
		72	30	75.0
			36	75.0
			42	72.9
			48	69.0
		84	30	74.2
			36	70.1
			42	66.5
			48	63.2
		96	30	67.5
			36	64.1
			42	61.1
			48	58.3
120	80	60	30	75.0
			36	75.0
			42	71.0
			48	66.9
		72	30	72.0
			36	67.8
			42	64.0
			48	60.6
		84	30	64.7
			36	61.3
			42	58.2
			48	55.4
		96	30	58.8
			36	56.0
			42	53.4
			48	51.1

DOOR MULLION LOAD CAPACITY – PSF

NOMINAL DIMS.				WITH REINF.
FRAME HEIGHT INCHES	DOOR HEIGHT INCHES	WIDTH (W1) INCHES	WIDTH (W2) INCHES	EXT. (+) INT. (–)
102	84	60	30	75.0
			36	75.0
			42	75.0
			48	75.0
		72	30	75.0
			36	75.0
			42	75.0
			48	75.0
		84	30	75.0
			36	75.0
			42	75.0
			48	75.0
		96	30	75.0
			36	75.0
			42	75.0
			48	75.0
108	84	60	30	75.0
			36	75.0
			42	75.0
			48	75.0
		72	30	75.0
			36	75.0
			42	75.0
			48	75.0
		84	30	75.0
			36	75.0
			42	75.0
			48	74.9
		96	30	75.0
			36	74.2
			42	73.0
			48	69.4
114	84	60	30	75.0
			36	75.0
			42	75.0
			48	75.0
		72	30	75.0
			36	75.0
			42	75.0
			48	70.8
		84	30	75.0
			36	72.4
			42	68.5
			48	65.0
		96	30	70.0
			36	66.3
			42	63.1
			48	60.1
120	84	60	30	75.0
			36	75.0
			42	72.8
			48	68.4
		72	30	74.2
			36	69.7
			42	65.7
			48	62.2
		84	30	66.8
			36	63.2
			42	59.9
			48	56.9
		96	30	60.8
			36	57.8
			42	55.0
			48	52.5

DOOR MULLION LOAD CAPACITY – PSF

NOMINAL DIMS.				WITH REINF.
FRAME HEIGHT INCHES	DOOR HEIGHT INCHES	WIDTH (W1) INCHES	WIDTH (W2) INCHES	EXT. (+) INT. (–)
102	90	60	30	75.0
			36	75.0
			42	75.0
			48	75.0
		72	30	75.0
			36	75.0
			42	75.0
			48	75.0
		84	30	75.0
			36	75.0
			42	75.0
			48	75.0
		96	30	75.0
			36	75.0
			42	75.0
			48	75.0
108	90	60	30	75.0
			36	75.0
			42	75.0
			48	75.0
		72	30	75.0
			36	75.0
			42	75.0
			48	75.0
		84	30	75.0
			36	75.0
			42	75.0
			48	75.0
		96	30	75.0
			36	75.0
			42	75.0
			48	72.9
114	90	60	30	75.0
			36	75.0
			42	75.0
			48	75.0
		72	30	75.0
			36	75.0
			42	75.0
			48	73.7
		84	30	75.0
			36	75.0
			42	71.8
			48	67.9
		96	30	74.0
			36	69.9
			42	66.2
			48	62.9
120	90	60	30	75.0
			36	75.0
			42	75.0
			48	70.8
		72	30	75.0
			36	72.8
			42	68.4
			48	64.5
		84	30	70.2
			36	66.2
			42	62.5
			48	59.3
		96	30	64.0
			36	60.6
			42	57.6
			48	54.8

DOOR MULLION LOAD CAPACITY – PSF

NOMINAL DIMS.				WITH REINF.
FRAME HEIGHT INCHES	DOOR HEIGHT INCHES	WIDTH (W1) INCHES	WIDTH (W2) INCHES	EXT. (+) INT. (–)
102	96	60	30	75.0
			36	75.0
			42	75.0
			48	75.0
		72	30	75.0
			36	75.0
			42	75.0
			48	75.0
		84	30	75.0
			36	75.0
			42	75.0
			48	75.0
		96	30	75.0
			36	75.0
			42	75.0
			48	74.4
108	96	60	30	75.0
			36	75.0
			42	75.0
			48	75.0
		72	30	75.0
			36	75.0
			42	75.0
			48	75.0
		84	30	75.0
			36	75.0
			42	75.0
			48	75.0
		96	30	75.0
			36	75.0
			42	74.7
			48	71.5
114	96	60	30	75.0
			36	75.0
			42	75.0
			48	75.0
		72	30	75.0
			36	75.0
			42	75.0
			48	73.7
		84	30	75.0
			36	75.0
			42	75.0
			48	71.0
		96	30	75.0
			36	73.7
			42	69.6
			48	66.0
120	96	60	30	75.0
			36	75.0
			42	75.0
			48	73.3
		72	30	75.0
			36	75.0
			42	71.3
			48	67.1
		84	30	73.9
			36	69.3
			42	65.4
			48	61.8
		96	30	67.5
			36	63.7
			42	60.4
			48	57.3

DOOR MULLION

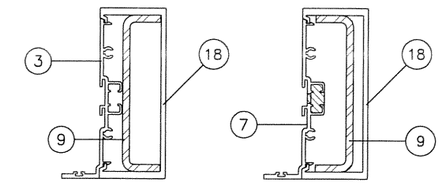

DOOR MULLION
WITH REINF.

	Ix IN^4	Sx IN^3
ALUMINUM	5.0950	2.0993
STEEL	2.2740	1.1025
TOTAL Ix ALUM + Ix STL X 2.9	11.6896	

ANCHOR TYPES	TOTAL NO. OF ANCHORS AT DOOR MULLION HEAD
A	14
B	8
C	8
D	8
E	10

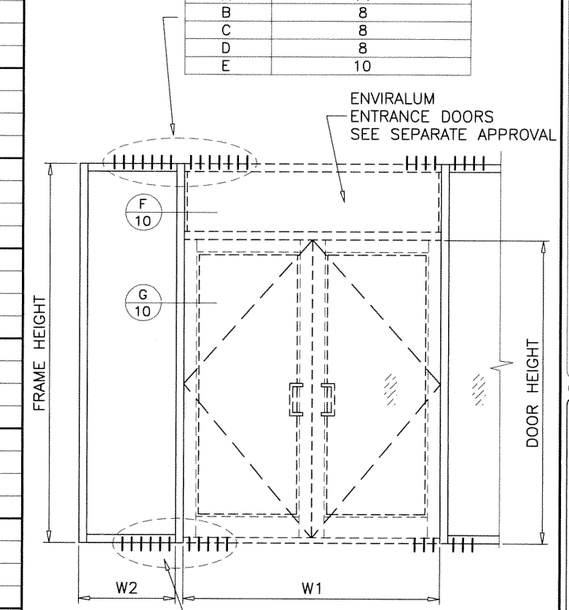

ANCHOR TYPES	TOTAL NO. OF ANCHORS AT DOOR MULLION BOTTOM
B	11
D	6

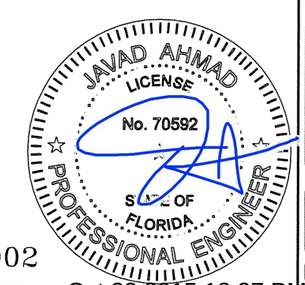

FL #19002

Oct 22 2015 12:37 PM

AL-FAROOQ CORPORATION
ENGINEERS & PRODUCT DEVELOPMENT
1235 S.W. 87 AVE
MIAMI, FLORIDA 33174
TEL. (305) 264-8100 FAX. (305) 262-6978

COMP–ANL\W15–74ENV

SERIES ENV–450 ALUM WINDOW WALL SYS. (L.M.I.)

ENVIRALUM INDUSTRIES INC.
5100 N.W. 72 AVENUE BLDG. C
MIAMI, FL. 33166
TEL. (305) 752–4411 FAX. (305) 406–3877

revisions:

no	date	by	description

date: 09–28–15
scale: –
dr. by: HAMID
chk. by:

drawing no. W15–74

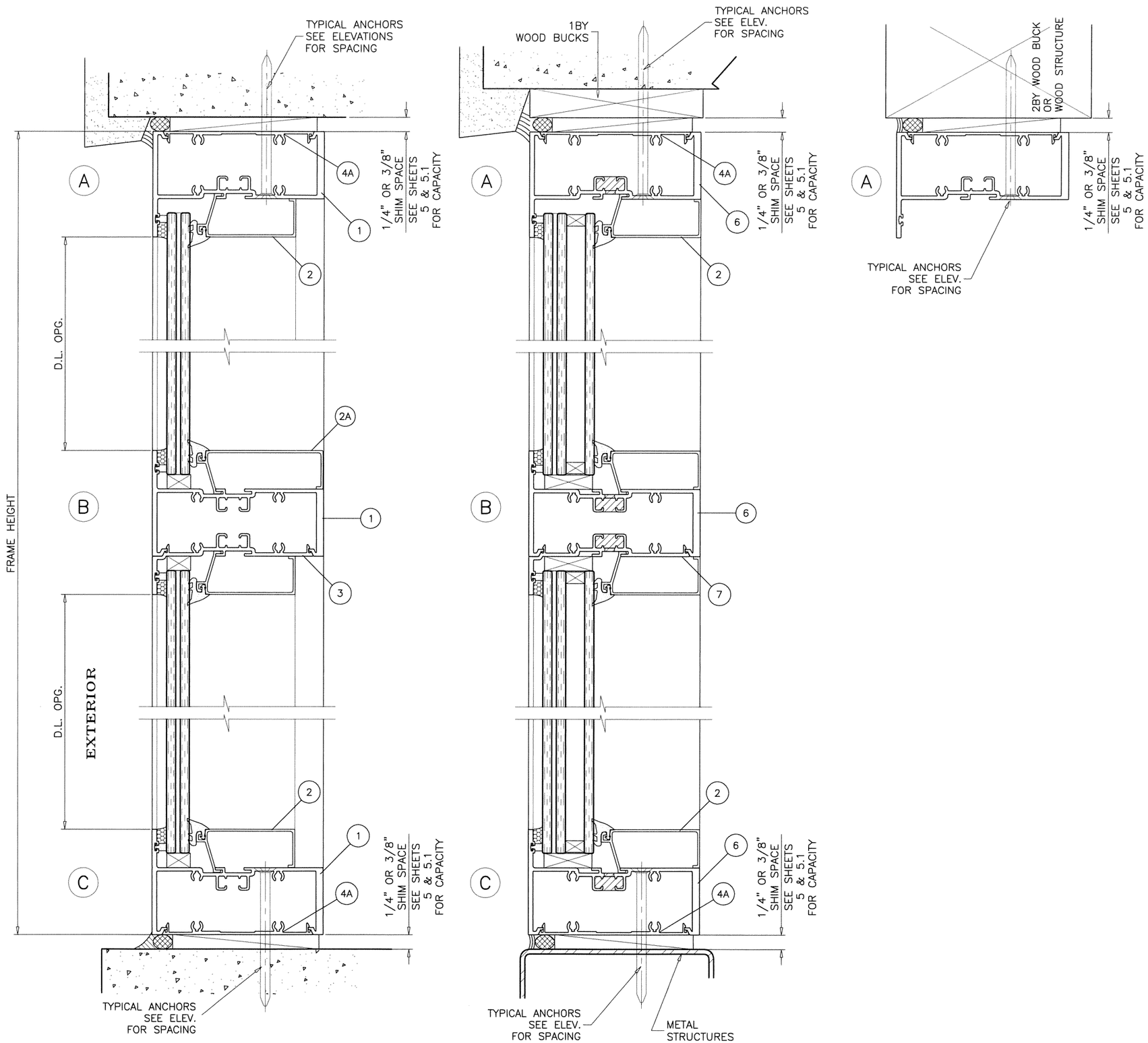

FL #19002

JAVAD AHMAD
LICENSE
No. 70592
STATE OF
FLORIDA
PROFESSIONAL ENGINEER

Oct 22 2015 12:38 PM

AL-FAROOQ CORPORATION
ENGINEERS & PRODUCT DEVELOPMENT
1235 S.W. 87 AVE
MIAMI, FLORIDA 33174
TEL. (305) 264-8100 FAX. (305) 262-6978

COMP-ANL\W15-74ENV

SERIES ENV-450 ALUM WINDOW WALL SYS. (L.M.I.)

ENVIRALUM INDUSTRIES INC.
5100 N.W. 72 AVENUE BLDG. C
MIAMI, FL. 33166
TEL. (305) 752-4411 FAX. (305) 406-3877

revisions:

no	date	by	description

date: 09-28-15
scale: 3/8" = 1"
dr. by: HAMID
chk. by:

drawing no.
W15-74

sheet 8 of 12

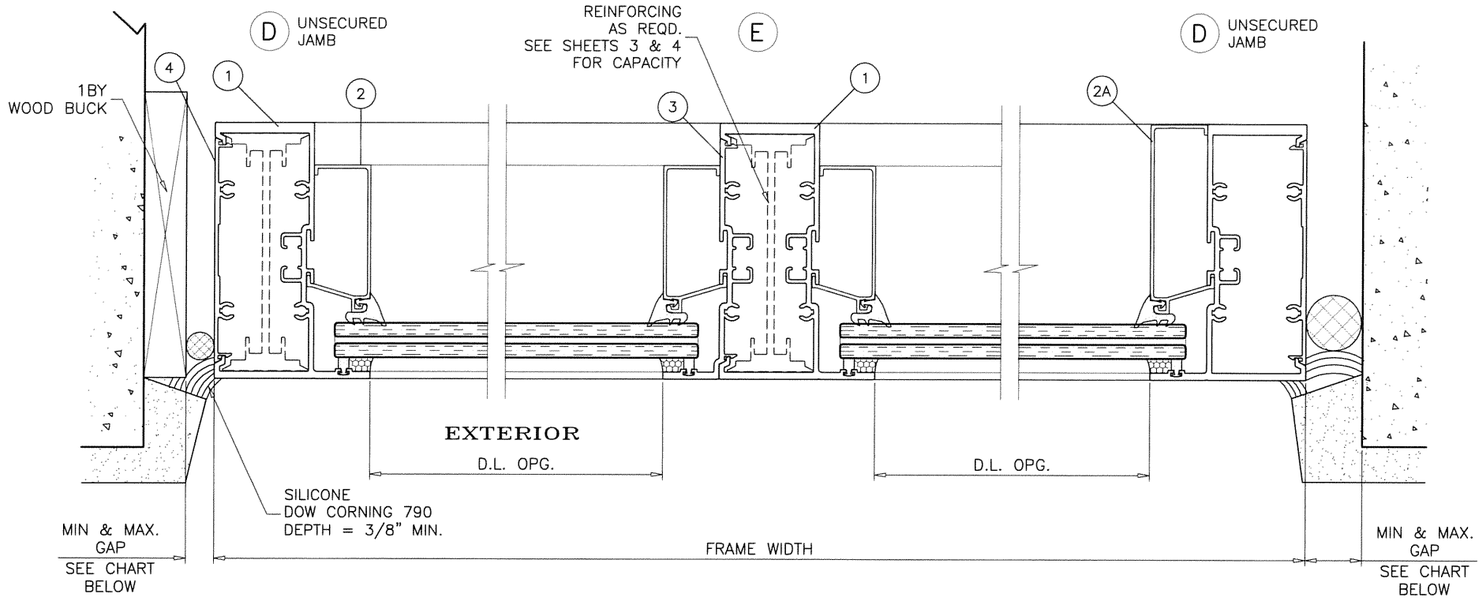

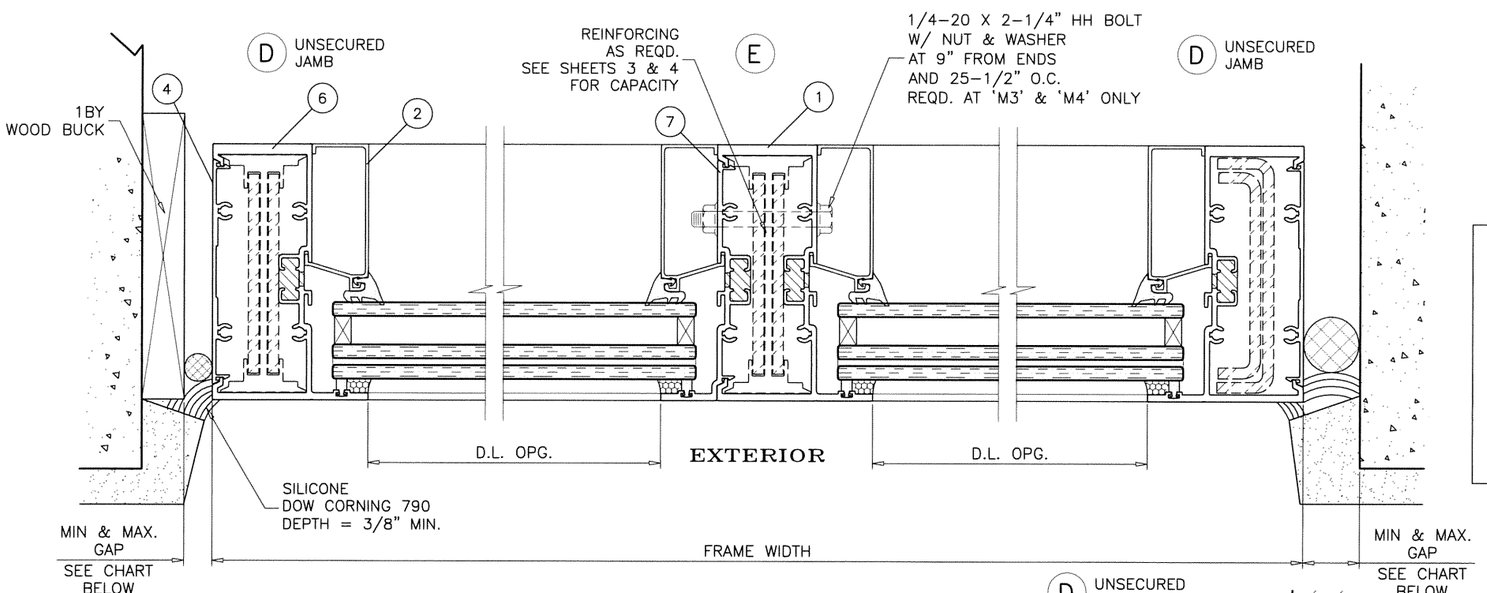

MAX. FRAME HEIGHT	GAP	
	MIN.	MAX.
84"	1/4"	1"
96"	5/16"	1"
120"	3/8"	1"
144"	1/2"	1"

ALTERNATE SEALANTS AT JAMB GAPS CAN BE DESIGNED BY ENGINEER OF RECORD BASED ON MANUFACTURER GUIDE LINES.

UNSECURED JAMBS FREE STANDING

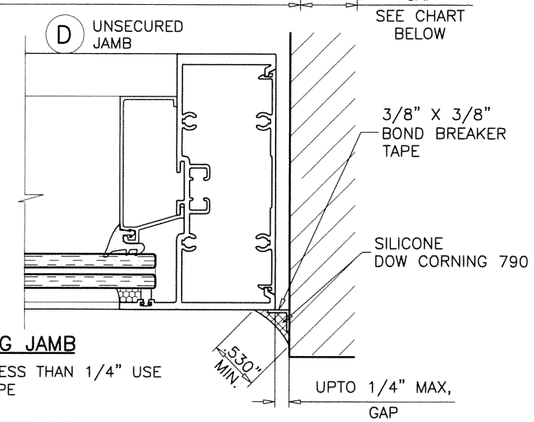

FREE STANDING JAMB

FOR JOINTS GAP LESS THAN 1/4" USE BOND BREAKER TAPE SEE DETAIL ABOVE

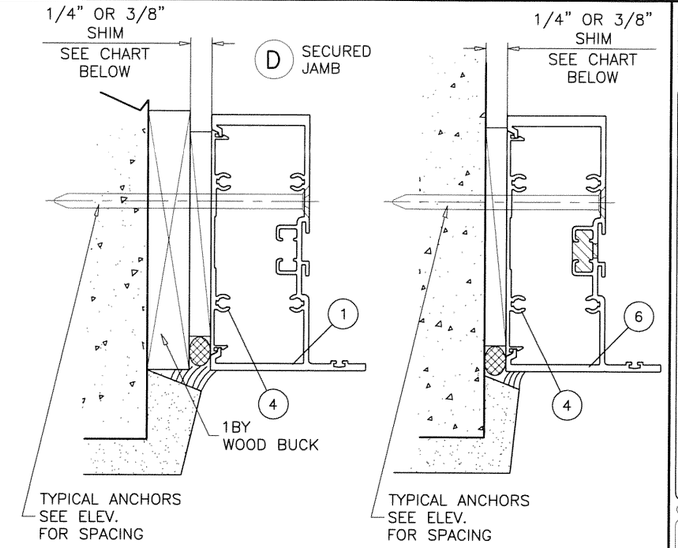

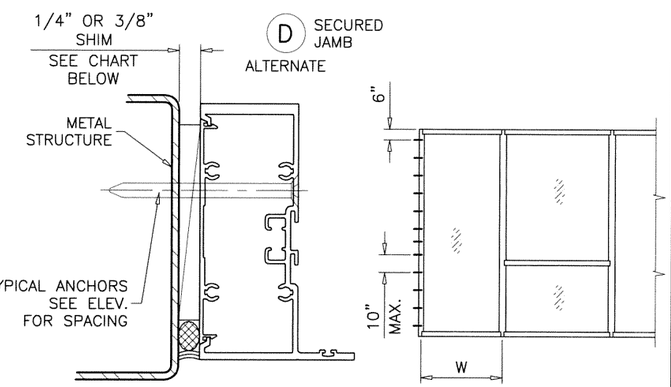

JAMB ANCHORS DESIGN LOAD CAPACITY – PSF						
	3/8" MAX. SHIM			1/4" MAX. SHIM		
	TYPE 'A'&'B'	TYPE 'C'&'D'	TYPE 'E'	TYPE 'A'&'B'	TYPE 'C'&'D'	TYPE 'E'
WIDTH (W)	EXT.(+) INT.(–)	EXT.(+) INT.(–)	EXT.(+) INT.(–)	EXT.(+) INT.(–)	EXT.(+) INT.(–)	EXT.(+) INT.(–)
30"	131.0	131.0	131.0	131.0	131.0	131.0
36"	111.0	131.0	131.0	131.0	131.0	131.0
42"	95.2	131.0	127.7	131.0	131.0	131.0
48"	83.3	131.0	111.8	131.0	131.0	131.0
54"	74.0	131.0	99.4	131.0	131.0	131.0
60"	66.6	125.3	89.4	122.9	131.0	131.0
66"	60.6	113.9	81.3	111.7	121.3	131.0
72"	55.5	104.4	74.5	102.4	111.2	131.0

SECURED JAMBS

(REINFORCING NOT REQUIRED)

JAVAD AHMAD LICENSE No. 70592 STATE OF FLORIDA PROFESSIONAL ENGINEER

FL #19002

Oct 22 2015 12:38 PM

AL-FAROOQ CORPORATION
ENGINEERS & PRODUCT DEVELOPMENT
1235 S.W. 87 AVE
MIAMI, FLORIDA 33174
TEL. (305) 264-8100 FAX. (305) 262-6978
COMP-ANL\W15-74ENV

SERIES ENV-450 ALUM WINDOW WALL SYS. (L.M.I.)

ENVIRALUM INDUSTRIES INC.
5100 N.W. 72 AVENUE BLDG. C
MIAMI, FL. 33166
TEL. (305) 752-4411 FAX. (305) 406-3877

revisions:

no	date	by	description

date: 09-28-15
scale: 3/8" = 1"
dr. by: HAMID
chk. by:

drawing no. W15-74

SEE SEPARATE APPROVAL FOR DESIGN LOAD CAPACITY OF DOORS AND DOOR ANCHORS.

LOWER VALUES FROM DOORS APPROVAL OR STOREFRONT SYSTEM CAPACITY CHARTS WILL APPLY TO ENTIRE SYSTEM.

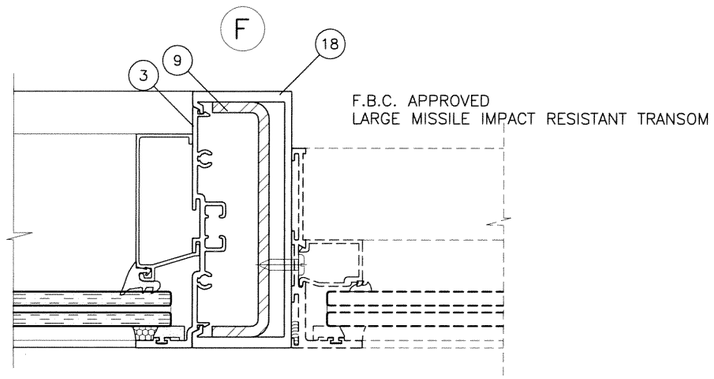

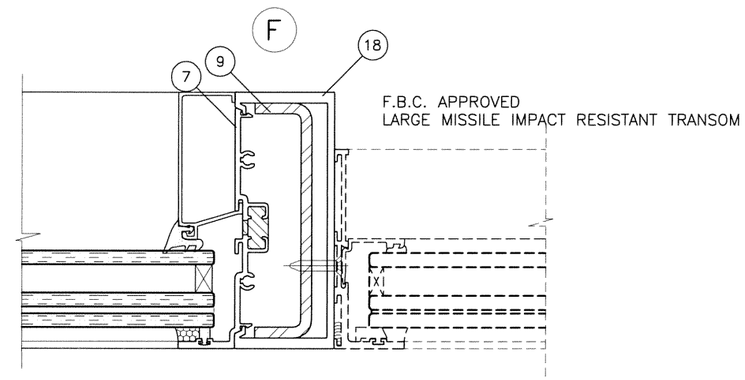

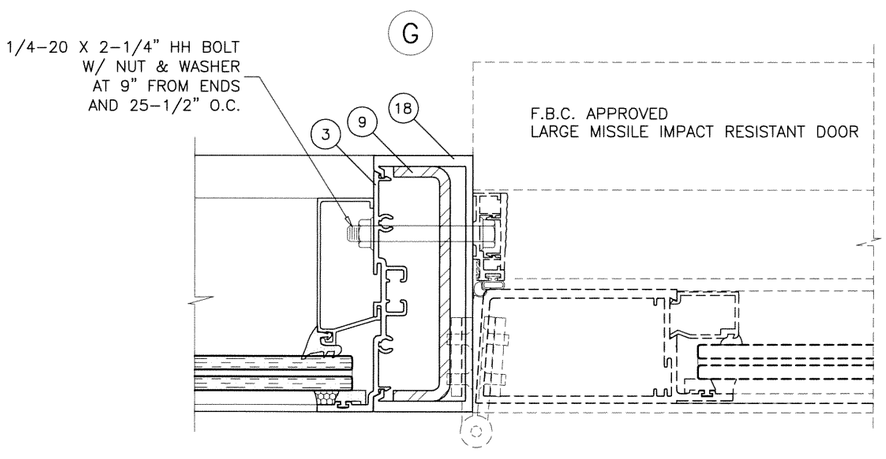

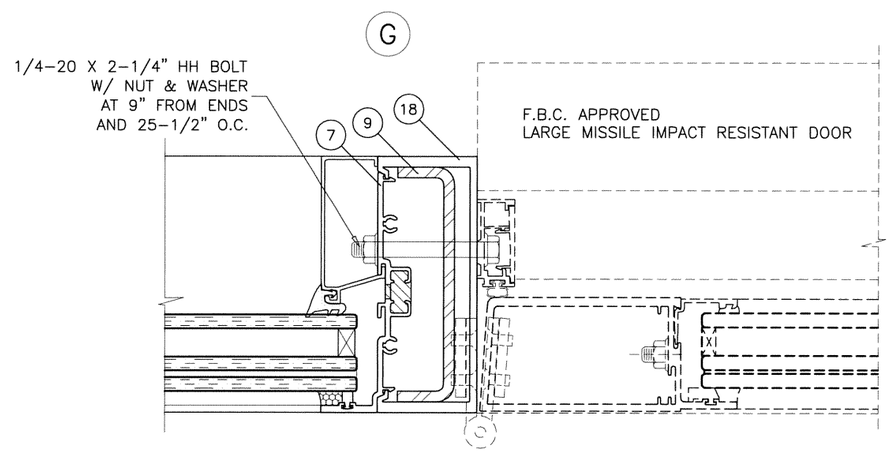

JAVAD AHMAD
LICENSE
No. 70592
STATE OF FLORIDA
PROFESSIONAL ENGINEER

FL #19002

Oct 22 2015 12:38 PM

AL-FAROOQ CORPORATION
ENGINEERS & PRODUCT DEVELOPMENT
1235 S.W. 87 AVE
MIAMI, FLORIDA 33174
TEL. (305) 264-8100 FAX. (305) 262-6978

COMP-ANL\W15-74ENV

SERIES ENV-450 ALUM WINDOW WALL SYS. (L.M.I.)

ENVIRALUM INDUSTRIES INC.
5100 N.W. 72 AVENUE BLDG. C
MIAMI, FL. 33166
TEL. (305) 752-4411 FAX. (305) 406-3877

revisions:

no	date	by	description

date: 09-28-15
scale: 3/8" = 1"
dr. by: HAMID
chk. by:

drawing no.
W15-74

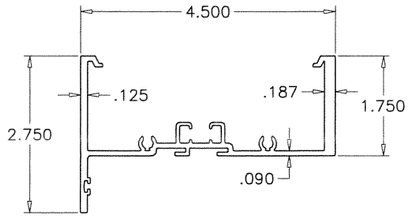

1 HEAD/SILL/JAMB/INTERMEDIATE

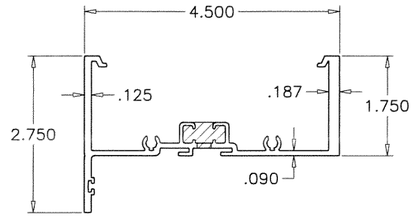

6 HEAD/SILL/JAMB/INTERMEDIATE

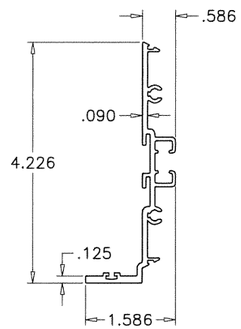

3 FIN SNAP

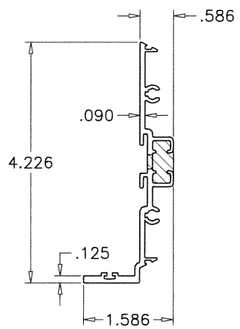

7 FIN SNAP

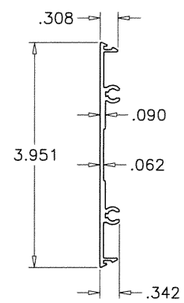

4 FLAT SNAP

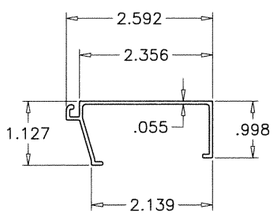

2 GLASS STOP

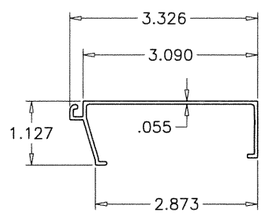

2A EXTENDED GLASS STOP

ITEM NO.	PART NUMBER	QUANTITY	DESCRIPTION	MATERIAL	MANF./SUPPLIER/REMARKS
1	ENV-451	AS REQD.	HEAD/SILL/JAMB & INTERMEDIATE	6063-T6	ENVIRALUM
2	ENV-452	AS REQD.	GLASS STOP	6063-T6	ENVIRALUM
2A	ENV-458	AS REQD.	EXTENDED GLASS STOP (OPTION TO ENV-452)	6063-T6	ENVIRALUM
3	ENV-453	AS REQD.	FIN SNAP	6063-T6	ENVIRALUM
4	ENV-454	1/ FREE STANDING JAMB	FLAT SNAP FULL LENGTH OF VERTICAL	6063-T6	ENVIRALUM
4A	ENV-454-3	1/ INSTALL SCREW	FLAT SNAP, 3" LONG	6063-T6	ENVIRALUM
4B	ENV-454-7	1/ CORNER	FLAT SNAP, 7" LONG	6063-T6	ENVIRALUM
5	ENV-455	AS REQD.	ALUMINUM REINFORCEMENT	6063-T6	ENVIRALUM
6	ENV-451T	AS REQD.	HEAD/SILL/JAMB & INTERMEDIATE (THERMAL)	6063-T6	ENVIRALUM
7	ENV-453T	AS REQD.	FIN SNAP (THERMAL)	6063-T6	ENVIRALUM
8	ENV-ST1	AS REQD.	3/16" X 3-1/2' BAR	STEEL	ENVIRALUM
9	ENV-ST2	AS REQD.	1" X 4-1/8" X 1" X 3/16" THK. CHANNEL	STEEL	ENVIRALUM
10	ENV-ST3	AS REQD.	3/4" X 3-5/8" X 3/4" X 3/16" THK. CHANNEL	STEEL	ENVIRALUM
11	ENV-G01	AS REQD.	INTERIOR GASKET	EPDM	GLAZING RUBBER PRODUCTS
12	ENV-G03	AS REQD.	SPACER GASKET	EPDM	GLAZING RUBBER PRODUCTS
13	ENV-SB01	1/ QUARTER POINT	3/8" X 1/2" X 2" SETTING BLOCKS, DUROMETER 70±5	EPDM	FRANK LOWE RUBBER
14	ENV-SB02	1/ QUARTER POINT	3/8" X 1-1/4" X 2" SETTING BLOCKS, DUROMETER 70±5	EPDM	FRANK LOWE RUBBER
15	DOW 791	AS REQD.	GLAZING COMPOUND	SILICONE	DOW CORNING
16	GE SCS2000	AS REQD.	GLAZING COMPOUND	SILICONE	GE MOMENTIVE
17	#12 X 1-1/2	4/ CORNER	FRAME ASSEMBLY SCREWS	ST. STEEL	HWH SMS
18	ENV-355	AS REQD.	DOOR MULLION	6063-T6	–

SEALANTS:

ALL FRAME CORNERS, JOINTS, MULLION SEAMS AND PERIMETER OF GLAZING BEAD TO FRAME SEALED WITH SILICONE SEALANT.

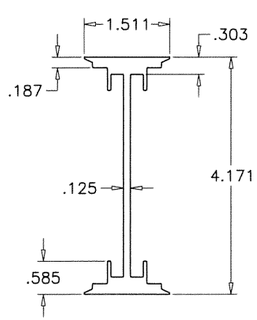

5 ALUM REINF.

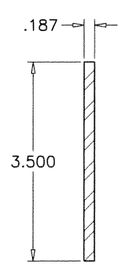

8 STEEL BAR REINF.

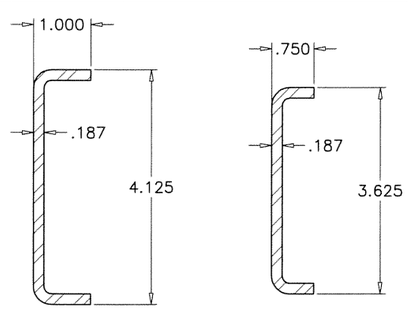

9 STEEL CHANNEL REINF. 10

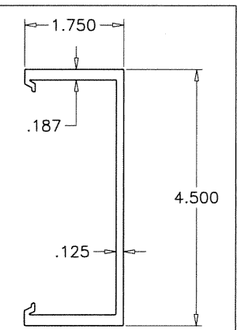

18 DOOR MULLION

FL #19002

JAVAD AHMAD
LICENSE
No. 70592
STATE OF FLORIDA
PROFESSIONAL ENGINEER

Oct 22 2015 12:38 PM

AL-FAROOQ CORPORATION
ENGINEERS & PRODUCT DEVELOPMENT
1235 S.W. 87 AVE
MIAMI, FLORIDA 33174
TEL. (305) 264-8100 FAX. (305) 262-6978

COMP-ANL\W15-74ENV

SERIES ENV-450 ALUM WINDOW WALL SYS. (L.M.I.)

ENVIRALUM INDUSTRIES INC.
5100 N.W. 72 AVENUE BLDG. C
MIAMI, FL. 33166
TEL. (305) 752-4411 FAX. (305) 406-3877

revisions:			
no	date	by	description

date: 09-28-15
scale: 3/8" = 1"
dr. by: HAMID
chk. by:

drawing no. W15-74

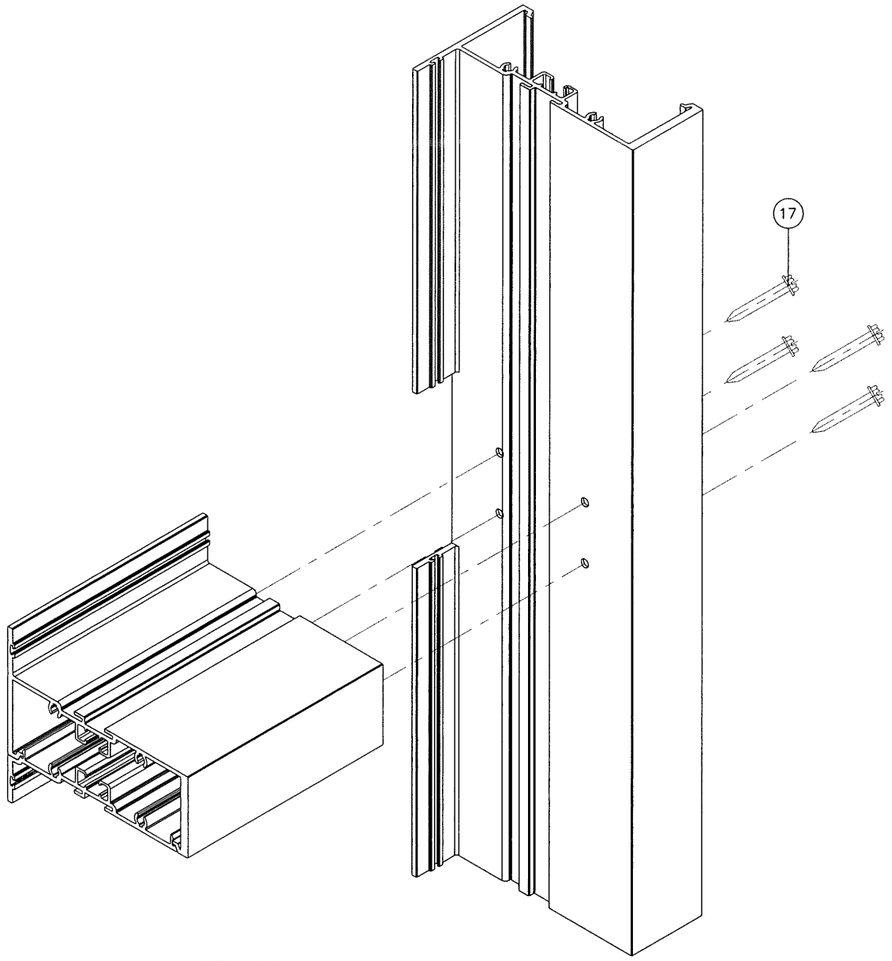

INTERMEDIATE CORNERS

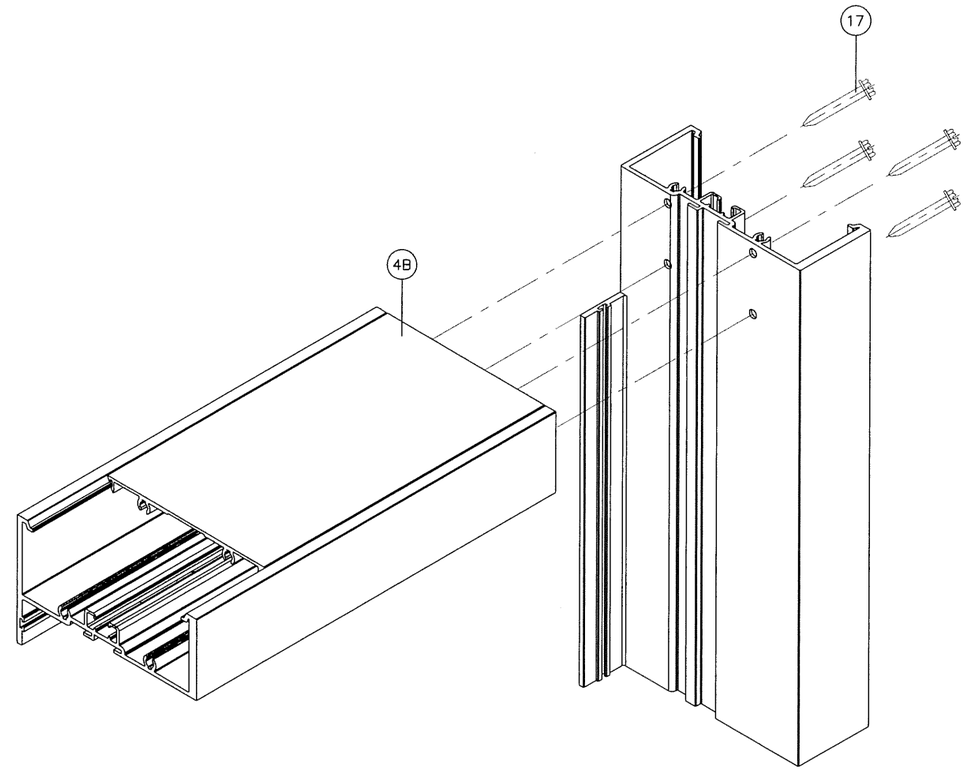

TOP/BOTTOM CORNERS

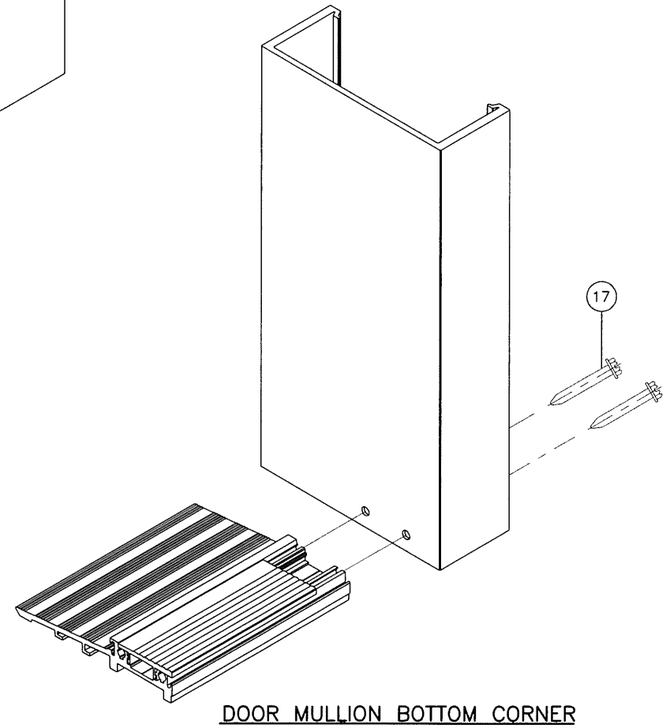

DOOR MULLION BOTTOM CORNER

FL #19002

JAVAD AHMAD
LICENSE
No. 70592
STATE OF FLORIDA
PROFESSIONAL ENGINEER

AL-FAROOQ CORPORATION
ENGINEERS & PRODUCT DEVELOPMENT
1235 S.W. 87 AVE
MIAMI, FLORIDA 33174
TEL. (305) 264-8100 FAX. (305) 262-6978

COMP-ANL\W15-74ENV

SERIES ENV-450 ALUM WINDOW WALL SYS. (L.M.I.)

ENVIRALUM INDUSTRIES INC.
5100 N.W. 72 AVENUE BLDG. C
MIAMI, FL. 33166
TEL. (305) 752-4411 FAX. (305) 406-3877

revisions:			
no	date	by	description

date: 09-28-15
scale: 3/8" = 1"
dr. by: HAMID
chk. by:

drawing no.
W15-74

Oct 22 2015 12:38 PM